ISSN 1068-3712, Russian Electrical Engineering, 2020, Vol. 91, No. 2, pp. 128–134. © Allerton Press, Inc., 2020.
Russian Text © The Author(s), 2019, published in Elektrotekhnika, 2019, No. 9, pp. 25–31.

Electromagnetic Effect of an Alternating Current Traction Power Supply System with a High-Voltage Power Cord on Electrical Installations and Networks of Nontraction Consumers

A. B. Kosarev[a], * and B. I. Kosarev[b]

[a]*JSC All Russian Scientific Research Institute of Railroad Transport, Moscow, 129851 Russia*
[b]*Russian University of Transport, Moscow, 127055 Russia*
**e-mail: journal-elektrotechnika@mail.ru*

Received April 4, 2019; revised June 3, 2019; accepted June 4, 2019

Abstract—In this paper, we ground a method for calculating switching overvoltages including the discharge of lightning currents into the contact network and into a high-voltage power wire (HVPW) to isolate the contact network in the power supply system with the HVPW. It was established that the protection of outdoor signaling, centralization, and blocking (SCB) devices from switching overvoltages in a power supply system with a high-voltage power wire (PSS HVPW) can be solved by connecting the reinforcement of the support foundations of the contact network to an extended artificial grounding conductor (GC) located under the ground and not connected to the rail track. The use of a GC, along with limitation of pulse overvoltages on the insulation of the contact network supports, solves the problem of ensuring reliable protection of the traction networks from short-circuit currents in the traction network. An algorithm for calculating the voltage of the zero sequence of phase voltages of overhead power lines (OPLs) with an isolated neutral relative to the ground when they are located in the zones of electromagnetic influence of the PSS with the HVPW was developed. Due to the electrical effect of the HVPW voltage, the induced voltage in an OPL is shown to reach values that significantly exceed the levels allowed by regulatory documents. An analysis of the obtained results indicates the feasibility of placing OPL wires on free-standing supports outside the reserved strip. The need for such a solution is also determined by keeping the HVPW voltage from entering the OPL wires, with their possible breakage.

Keywords: traction network, power wire, switching overvoltage, artificial ground conductor, electric influence, current, voltage

DOI: 10.3103/S1068371220020054

A need to reinforce the traction power supply system in alternating current sections appears when there are restrictions on the power of traction substations, the voltage level on the current collector of electric rolling stock, and the heating of contact suspension wires. The restrictions are due to a continuous increase in freight traffic, an increase in the unit weight of trains, and the introduction of multiple traction. The growth of traction loads is limited by the load capacity of the main elements of the traction network.

In ac sections, various methods are used for purposes of reinforcement: replacing traction transformers with more powerful ones; construction of additional traction substations, sectioning posts, and parallel connection points; hanging reinforcing and shielding wires; the use of volt-boost transformers, installation of longitudinal and lateral compensation; and transition to a traction power supply system of 2–25 kV with autotransformers [1–3]. Strengthening the traction power supply system of alternating current in cargo-intensive and high-speed sections can be done, according to [4], by using a power supply system (PSS) with a high-voltage power wire (HVPW) (PSS HVPW). A schematic diagram of a traction power supply system with a high-voltage power wire is shown in Fig. 1 [4, 5].

The power supply system with the HVPW operates as follows. Separation–balancing three-phase–two-phase transformers *1* are connected to phases *A*, *B*, and *C* of power line *2* with linear voltage U_{OPL} equal to 110 kV. In this case, transformers *1* separate power line *2* from the traction network and prevent the flow of zero-sequence currents in line *2*. The voltage transformation in the first part of the primary winding with a transformation coefficient equal to $n_{\mathrm{T1}} = 1$ and in the second part with a transformation coefficient equal to $n_{\mathrm{T2}} = \frac{\sqrt{3}}{2}$ provides voltages equal to the linear voltage of the transmission line of 110 kV on the terminals of the secondary windings of both parts. The secondary

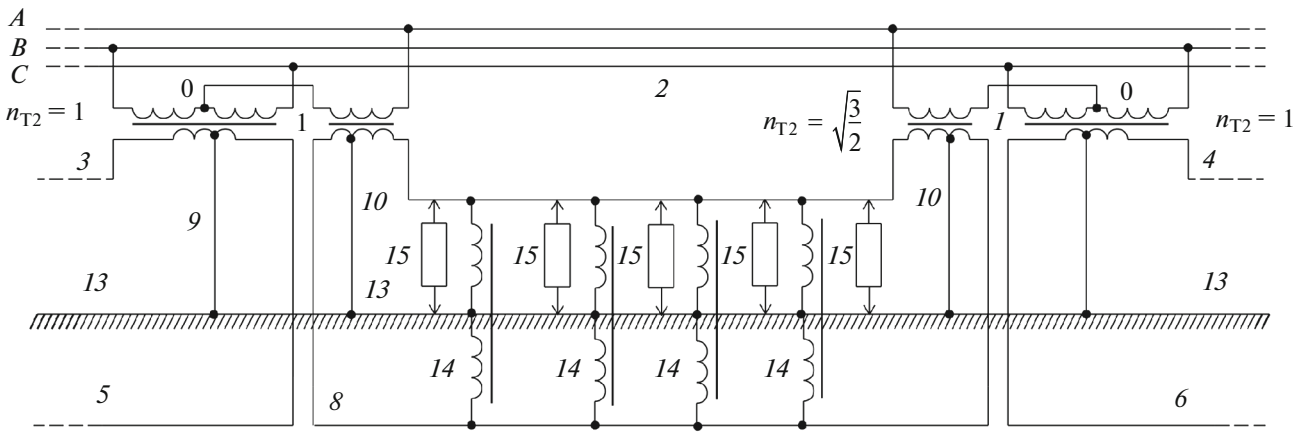

Fig. 1. Principal electrical equivalent circuit of the HVPW PSS.

windings of the first part are connected between contact suspensions *3* and *4* and power (high voltage) wires *5* and *6*. The output terminals of the second part of the secondary winding are connected to contact suspension *7* and power wire *8*. Since three- and two-phase transformers *1* are connected according to a Scott scheme, the voltages of the first and second parts of the primary windings are mutually perpendicular in phase and will be also mutually perpendicular to the voltage of the secondary windings. This significantly reduces the asymmetry of the currents in overhead power line (OPL) *2*, while complete symmetrical loading of OPL *2* is ensured at the same load on the substation shoulders. When connecting autotransformers *14* with the primary windings between longitudinal supply wire *8* and rails *13* to a voltage of 85 kV and with secondary windings between contact suspension *7* and rails *13*, the permissible voltage in the traction network is provided at the power points of contact suspension *7*. Located on the stage, electric locomotives *15* are powered by two neighboring autotransformers *14*, while electric locomotives *15* located between the substation and the closest autotransformer *14* are powered by this autotransformer *14* and by part of the secondary winding of three-phase–two-phase transformer *1*, the special output of which is connected to rails *13* using a section line *10*. Since a voltage of 110 kV is provided between contact suspension *7* and supply wire *8*, the current load of suspension wires *7* and wire *8* is reduced, as are the voltage and power loss in the traction network. In this case, a voltage of 25 kV is created between the contact suspension and the rails, while a voltage of 85 kV is generated between the power wire and the rails.

To power electric locomotives located between the traction substation and the first point with an autotransformer, the secondary windings of the transformers of the traction substations have special leads connected to the rails. The power wire can be suspended on special consoles on the supports of the contact network from the field side. In some cases, specially arranged supports may be provided for positioning the power supply wires.

Note that single-phase transformers with the primary winding connected between the contact network and the HVPW and the secondary winding connected between the contact network and rails *13* can be used instead of autotransformers *14*.

A number of problems that need to be addressed arise when introducing an HVPW PSS. These primarily include grounding of contact network supports, protection of electrical installations and nontraction power supply networks (for example, self-locking devices and SCB devices) from pulse overvoltages (lightning and internal switching) arising in an HVPW PSS, and reduction to permissible values of the electrical effect of the HVPW SE on nontraction power supply OPLs.

The most promising way to solving the problem of protection from pulse overvoltages (lightning and switching) arising in an HVPW PSS in electrical installations and nontraction power supply systems, in particular, self-blocking and SCB devices, is to do without a rail track to the ground contact network supports on which the HVPW is suspended [3, 5].

Grounding of the contact network supports and protection of floor SCB devices from switching overvoltages in an HVPW PSS can be provided by connecting the contact network supports to an extended ground conductor (GC) (electrode) located on the ground and not connected to the rail track. For purposes of safer maintenance of the poles of a contact network and the operation of rail circuits, the length of one section of an artificial ground conductor must be at least 400 m, with the ground conductor being located under the ground at a depth of no less than 0.5 m. The experience of using GCs for lightning protection of high-voltage OPLs in in regions with rocky and permafrost soils is known [6].

The use of the GC along with the restriction of pulse overvoltages on the insulation of the contact network supports provides reliable protection of traction networks from short circuit currents [5]. Indeed, the input resistance of the GC is significantly less than the analogous parameter when grounding supports with a group grounding cable in the absence of its connection to the rail.

In the general case, the electrical circuit for replacing a GC is represented by a circuit with distributed parameters, the primary characteristics of which depend on the frequency due to the surface effect in the ground and the metal strip. High frequencies prevail in the spectral composition of the lightning current. When lightning currents flow through a metal grounding conductor, its active resistance and the internal and external inductances of the "grounding conductor–ground" circuit vary widely due to the surface effect. To a greater extent, the surface effect at frequencies $\omega = 10^4$–10^5 s^{-1} or higher affects the active resistance and internal inductance of the GC.

A method for calculating the parameters of the equivalent circuit of a steel conductor (rails) was proposed in [7]. We will use these results to construct the equivalent circuit of the strip ground conductor.

The problem of the surface effect in steel conductors is solved of the basis on a joint solution of the Maxwell equations written in a cylindrical coordinate system:

$$\frac{\partial H}{\partial r} + \frac{H}{r} = \gamma E,$$

$$\frac{\partial E}{\partial r} + \frac{\partial B}{\partial t}, \qquad (1)$$

where B and H are the instantaneous values of induction and strength of a magnetic field, E is the instantaneous value of the electric field strength in a metal conductor with a specific electrical conductivity of the material (γ), and t is time.

Let us present the dependence of magnetic induction in steel on the magnetic field in the form of the equation [8]

$$B = kH + \alpha \arctan \beta H \text{ at } -\infty < H < +\infty,$$

where coefficients k, α, and β are determined by the method of the selected points.

Solving Eqs. (1) together, we obtain

$$\frac{\partial^2 H}{\partial r^2} + \frac{1}{r}\frac{\partial H}{\partial r} - \frac{1}{r^2}H = \gamma \frac{\partial B}{\partial H}\frac{\partial H}{\partial t}. \qquad (2)$$

Derivative $\frac{\partial B}{\partial H} = \mu_g$, the differential magnetic permeability of the steel of which the metal strip (with a size of $(4 \times 5) \times 10^{-4}$ m^2) is made, is calculated by the following formula:

$$\mu_g = k + \frac{\alpha\beta}{1 + \beta^2 H^2}.$$

It is established that, in relation to the steel from which the metal strip is made, $k = n_1\mu_0 \approx 25\mu_0$, where $n_1 = 25$, and $\alpha = n_2\mu_0 = 360\ \mu_0$ at $n_2 = 360$ A/m and $\beta = 0.75$ m/A, where $\mu_0 = 12.56 \times 10^{-7}$ G/m is the absolute magnetic permeability of the vacuum.

We rewrite equation Eqs. (1) and (2) in relative units:

$$\frac{\partial^2 \bar{H}}{\partial^2 \bar{r}} + \frac{\partial \bar{H}}{\partial \bar{r}}\frac{1}{\bar{r}} - \frac{\bar{H}}{\bar{r}^2} = \left(n_1 + \frac{n_2\beta}{1 + (0.5\beta E_e r_e \gamma \bar{H})^2}\right)\frac{\partial \bar{H}}{\partial \bar{t}},$$

$$\frac{\partial \bar{H}}{\partial \bar{r}} + \frac{\bar{H}}{\bar{r}} = \bar{E},$$

at

$$\bar{H} = \frac{H}{H_e};\ \bar{r} = \frac{r}{r_e};\ \bar{t} = \frac{t}{t_e};\ \bar{E} = \frac{E}{E_e},\ E_e = \frac{2H_e}{\gamma r_e},$$

$$H_e = \frac{I_g}{2\pi r_e} = \frac{\gamma E_e \pi r_e^2}{2\pi r_e} = \frac{1}{2}\gamma E_e r_e,\ t_e = \gamma\mu_0 r_e^2,$$

where H_e and E_e are the magnetic and electric field strengths on the surface of the cylinder with radius r_e corresponding to the steady-state value of the current when it is turned on at a constant voltage.

To determine the boundary conditions, we take into account that the electric field strength is instantly established on the cylinder surface. Then, the first boundary condition in the relative form at $\bar{r} = 1$ is

$$\frac{\partial \bar{H}}{\partial \bar{r}} + \bar{H} = 2.$$

The second boundary condition is

$$\bar{H} = 0 \text{ at } \bar{r} = 0.$$

We numerically find the solution of differential equations (2) using the finite difference method. Substituting in formulas (2) the difference expressions of derivatives of the first and second orders, we obtain

$$\bar{H}_{i,j+1} = \bar{S}\left(\frac{\bar{H}_{i+1,j} - 2\bar{H}_{i-1,j}}{\bar{I}^2} + \frac{\bar{H}_{i+1,j} - \bar{H}_{i-1,j}}{2\bar{I}\bar{r}_i} - \frac{\bar{H}_{i,j}}{\bar{r}_i^2}\right)$$
$$\times \frac{1}{\left(n_1 + \frac{n_2\beta}{1 + (0.5\beta E_e r_e \gamma \bar{H}_{i,j})^2}\right)} + \bar{H}_{i,j}$$

at

$$\bar{S} = \frac{S}{t_e} \text{ and } \bar{I} = \frac{1}{r_e},$$

where $\bar{S}$ and $\bar{I}$ are the integrating steps over the variables $\bar{t}$ and $\bar{r}$ expressed in relative units.

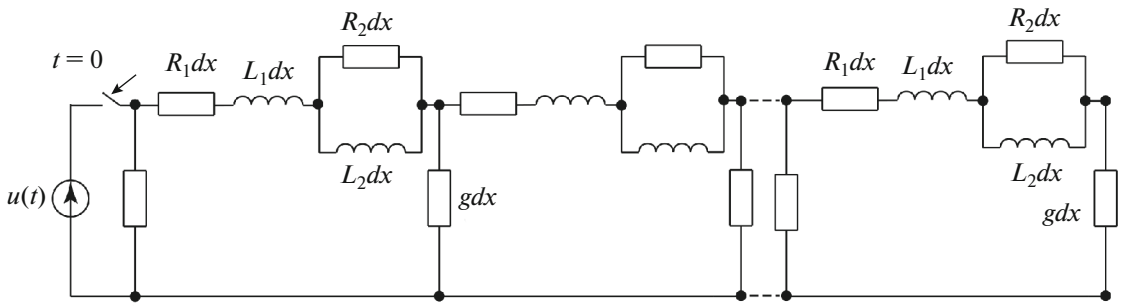

Fig. 2. Calculated electrical equivalent circuit of a strip GC.

In determining the first boundary condition, we take into account that

$$\left(\frac{\partial \bar{\mathrm{H}}}{\partial \bar{\mathrm{r}}}\right)_{i,j} = \frac{\bar{\mathrm{H}}_{i,j} - \bar{\mathrm{H}}_{i-1,j}}{\bar{\mathrm{I}}}.$$

Then, the first boundary condition is written in the following form:

$$\frac{\bar{\mathrm{H}}_{i,j} - \bar{\mathrm{H}}_{i-1,j}}{\bar{\mathrm{I}}} + \frac{\bar{\mathrm{H}}_{i-1,j}}{\bar{\mathrm{r}}_e} = 2$$

at $\bar{\mathrm{r}}_e = 1$.

To switch from a steel cylinder to a metal strip with cross-section perimeter P, instead of $0.5\,r_e$, it is necessary to introduce parameter S_s/P, where S_s is the cross-sectional area of the strip. In this case,

$$\bar{\mathrm{t}} = \frac{t}{t_e} = \frac{P^2}{4\gamma\mu_0 S_s^2} t.$$

Let us represent the instantaneous current value in a metallic strip that is calculated by a numerical method when it is turned on at a constant voltage by an expression of the following form:

$$i = I_g(1 - \alpha_1 e^{\beta_1 t} - \alpha_2 e^{\beta_2 t}), \quad (3)$$

where α_i and β_i are the coefficients obtained by approximating the current in a metal strip when it is turned on at a constant voltage that is calculated by the numerical method.

Using expression (3) and performing the circuit synthesis, we obtain the equivalent circuit of the metal strip in the form of a passive two-terminal network consisting of series-connected active resistance R_1 and inductance L_1, which are, in turn, connected to parallel-connected resistance R_2 and inductance L_2. Let R_1 be the resistance of the metal strip to direct current. The three other equivalent circuit parameters are calculated from the following ratios:

$$L_1' = \frac{R_1}{\alpha_1\beta_1 + \alpha_2\beta_2}; \; R_2 = R_1 \frac{\alpha_1\alpha_2(\beta_2 - \beta_1)^2}{(\alpha_1\beta_1 - \alpha_2\beta_2)^2};$$

$$L_2 = R_1 \frac{\alpha_1\alpha_2(\beta_2 - \beta_1)^2}{\beta_1\beta_2(\alpha_1\beta_1 - \alpha_2\beta_2)^2}.$$

The following parameters of the equivalent circuit were obtained for a metal strip with sizes of $(4 \times 5) \times 10^{-4}$ m^2:

$$R_1 = 0.1\ \Omega/\mathrm{km},\ L_1' = 0.25\times10^{-3}\ \mathrm{H/km};$$

$$L_2 = 4.2\times10^{-3}\ \mathrm{H/km};\ R_2 = 1.25\ \Omega/\mathrm{km}.$$

Finally, the electrical equivalent circuit of the steel strip is obtained by adding in series with L_2' the external inductance of the "strip–ground" circuit calculated according to the Pollyachek formula [9] for an equivalent frequency determined from the relation

$$\omega = \frac{\pi}{\tau} = \frac{3.14}{50\times10^{-6}} = 6\times10^4\ \mathrm{s}^{-1},$$

where τ is the duration of the lightning current.

Given the possibility of representing the elementary section of the strip ground conductor as a passive two-terminal network, the calculated equivalent circuit of the ground conductor located in the ground has the form of a line with distributed parameters (Fig. 2).

In Fig. 2, g is the transverse conductivity of a strip grounding conductor–earth circuit determined according to [5], $u(t)$ is the pulse voltage at the input of the ground conductor, and x is the current coordinate.

When constructing the electrical equivalent circuit of the strip ground conductor, it was taken into account that the strip GC capacity relative to the plane of the zero potential can be neglected [6].

The operator expressions of the wave resistance and propagation coefficient of a strip GC system are

$$Z_{\mathrm{w}}(\mathrm{p}) = \sqrt{\frac{\mathrm{p}^2 L_1 L_2 + \mathrm{p}(L_1 R_2 + L_2 R_1 + L_2 R_2) + R_1 R_2}{(\mathrm{p}L_2 + R_2)g}};$$

$$\gamma(\mathrm{p}) = \sqrt{\frac{\mathrm{p}^2 L_1 L_2 + \mathrm{p}(L_1 R_2 + L_2 R_1 + L_2 R_2) + R_1 R_2}{(\mathrm{p} L_2 + R_2)} g}.$$

Given that the line in question operates in the idle mode, the operator expression of the transient conductivity is

$$Y_{\mathrm{tr}}(\mathrm{p}) = \frac{1}{p Z_{\mathrm{w}}(\mathrm{p})} \tanh \gamma(\mathrm{p}) l.$$

Taking into account that, with an insignificant error for the spectral composition of the lightning current, we can write, according to [5, 10],

$$\frac{\tanh \gamma(\mathrm{p}) l}{r(\mathrm{p}) l} = \frac{\theta}{\theta + \gamma^2(\mathrm{p}) l^2}, \ \theta \approx 4.1.$$

We denote that

$$F_1(\mathrm{p}) = (\mathrm{p} L_2 + R_2)\theta g l;$$

$$F_3(\mathrm{p}) = \mathrm{p}^2 L_1 L_2 g l^2$$
$$+ \mathrm{p}((L_1 R_2 + L_2 R_1 + L_2 R_2) g l^2 + \theta L_2) + R_1 R_2 g l^2 + \theta R_2.$$

The original of the transient conductivity is calculated according to the Heaviside theorem:

$$Y_{\mathrm{tr}}(\mathrm{p}) + \mathrm{Y}_{\mathrm{tr}}(t) = \frac{F_1(0)}{F_3(0)} + \sum_{k=1}^{2} \frac{F_1(\mathrm{p}_k)}{\mathrm{p}_k F_3'(\mathrm{p}_k)} e^{\mathrm{p}_k t},$$

where the poles of function $Y_{\mathrm{tr}}(\mathrm{p})$ are determined by the formula

$$\mathrm{p}_{1,2} = -\frac{(L_1 R_2 + L_2 R_1 + L_2 R_2) g l^2 + \theta L_2}{r_{\mathrm{p}} L_1 L_2 g l^2}$$
$$\pm \sqrt{\left[\frac{(L_1 R_2 + L_2 R_1 + L_2 R_2) g l^2 + \theta L_2}{2 L_1 L_2 g l^2}\right]^2 - \frac{R_1 R_2 g l^2 + \theta R_2}{L_1 L_2 g l^2}}.$$

The final expression to determine transient conductivity is

$$y_{\mathrm{tr}}(t) = \frac{\tanh \sqrt{R_1 g l^2}}{\sqrt{\frac{R_1}{g}}} \left(1 - \frac{\sqrt{\frac{R_1}{g}}}{\tanh \sqrt{R_1 g l^2}} \sum_{k=1}^{2} \varepsilon_k e^{\mathrm{p}_k t}\right)$$

at

$$\varepsilon_k = \frac{F_1(\mathrm{p}_k)}{\mathrm{p}_k F_3'(\mathrm{p}_k)}.$$

In further calculations, we will represent the pulse voltage in the form of oblique angular pulses (Fig. 3, dashed lines).

At $0 \le t \le t_{\mathrm{f}}$, $u = k_1 t$; at $t_{\mathrm{f}} \le t$, $u = k_1 t - (k_1 + k_2)(t - \tau_{\mathrm{f}})$. In the above expressions,

$$k_1 = \frac{U_{\mathrm{p}}}{t_{\mathrm{f}}}; \ k_2 = \frac{0.5 U_{\mathrm{p}}}{\tau_{\mathrm{p}} - t_{\mathrm{f}}},$$

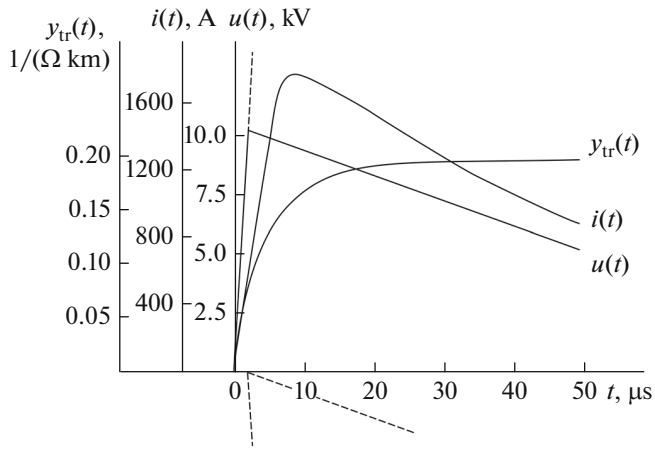

Fig. 3. Results of calculating the transient conductivity and current at the input of an extended GC.

where τ_{f} and t_{p} are the duration of the front and pulse of the voltage.

To determine current $i(t, x = 0)$, we use the Duhamel integral. For a known transient conductivity and a specified instantaneous voltage value at the input of a strip GC in the form of $u = k_1 t$ in the time interval of $0 \le t \le t_{\mathrm{f}}$,

$$i(t, x = 0) = k_1 \frac{\tanh \sqrt{R_1 g l}}{\sqrt{\frac{R_1}{g}}} t - \sum_{k=1}^{2} \frac{k_1 \varepsilon_k}{\mathrm{p}_k} (e^{\mathrm{p}_k t} - 1).$$

The instantaneous value of the current flowing into an extended GC is determined at $t_{\mathrm{f}} \le t$ by the superposition method:

$$i(t) = i(t, x = 0) - (1 + k_2/k_1) i(t - t_{\mathrm{f}}, x = 0).$$

As an example of calculating the lightning current flowing into an extended GC with a finite length, we consider the case of voltage $U_{\mathrm{n}} = 10^4$ V occurring at its input, $t_{\mathrm{f}} = 2 \times 10^{-6}$ s, and $\tau_{\mathrm{p}} = 50 \times 10^{-6}$ s. We assume that $g = 0.5$ 1/(Ω km) and the GC length is 400 m. We obtain

$$y_{\mathrm{tr}}(t) = 0.198 - 0.0024 e^{-294t} - 0.1956 e^{-2.077 \times 10^5 t}.$$

The results of calculating the lightning current flowing into an extended GC during a lightning discharge in the HVPW and supports grounding of the contact network with the GC are shown in Fig. 3.

Since the circuit is of active-inductive nature, at a length of an artificial GC of 400 m or more, the levels of switching overvoltages are commensurate with the overvoltages that occur when using a rail track as a natural ground conductor. In addition, the pulse resistance of the artificial GC (approximately 6 Ω) is significantly less than the resistance to support ground spreading (7.5 Ω) when using a group–ground cable and in the absence of its connection with the rail track.

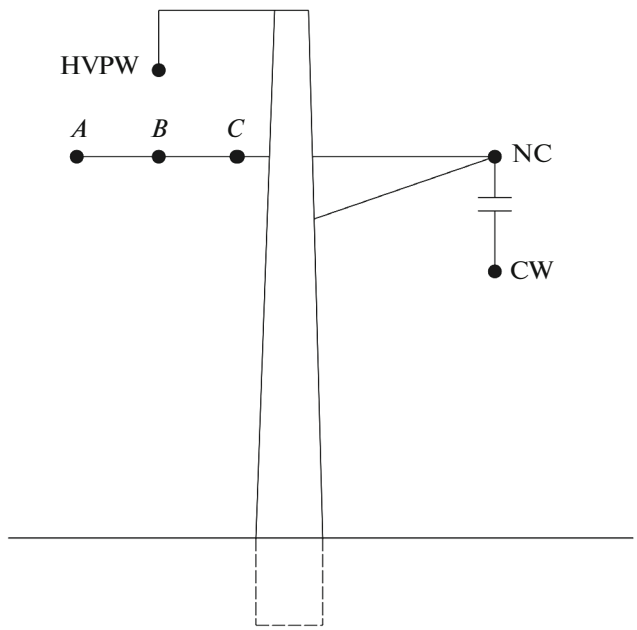

Fig. 4. Location of the HVPW PSS and OPL wires on the contact network support: CW is the contact wire, NT is the carrying cable, HVPW is the high-voltage power wire, and *A*, *B*, and *C* are the linear OPL wires.

This, in turn, indicates the appropriateness of using a partitioned strip artificial GC for lightning protection and grounding of the contact network supports when a high-voltage power wire is located at the supports.

For power supply to nontraction consumers located in close proximity to newly constructed or reconstructed electrified lines of high-speed railways, it is appropriate to use OPLs with a voltage of 20 or 35 kV.

These OPLs can be located both on the supports of the contact network and on supports located at some distance from the HVPW PSS. The layout of the OPL wires to determine electrical effect of the contact network and the HVPW is shown in Fig. 4.

The three-phase OPL is powered by an almost symmetrical system of voltages (both linear and phase) from the power source. The linear voltages of OLPs are equal in magnitude, and the voltage of the OLP–ground wire differ significantly in amplitude and phase. In this case, when they are decomposed into symmetrical components, the phase voltages of the three-phase system relative to the ground will include zero-sequence voltage U_0 that is caused mainly by the electrical effect of the voltages of the contact network and the HVPW [3].

The complex values of the phase voltages of OLPs relative to the ground are

$$\dot{U}_A = \dot{\varphi}_A - \dot{\varphi}_0 = \dot{U}_{a0} + \dot{U}_0,$$

$$\dot{U}_B = \dot{\varphi}_B - \dot{\varphi}_0 = \dot{U}_{b0} + \dot{U}_0 = \dot{U}_{a0}e^{-j120^\circ} + \dot{U}_0,$$

$$\dot{U}_C = \dot{\varphi}_C - \dot{\varphi}_0 = \dot{U}_{c0} + \dot{U}_0 = \dot{U}_{a0}e^{-j120^\circ} + \dot{U}_0,$$

where $\dot{U}_0$ is the zero-sequence voltage vector:

$$\dot{U}_0 = \frac{1}{3}(\dot{U}_A + \dot{U}_B + \dot{U}_C).$$

Let α_{11}, α_{22}, and α_{33} be the intrinsic potential coefficients of the OPL, HVPW, and contact network wires and α_{12}, α_{13}, α_{14}, and α_{15} be mutual potential coefficients between the OPL and HVPW wires, OPL wire and contact network, between OPL wires, and between the contact network and HVPW. The expressions for finding the intrinsic and mutual potential coefficients are given in [11].

To find the electrical effect of the HVPW PSS on the 10-kV OPL, we apply a system of Maxwell equations written as follows [11]:

$$\dot{U}_A = \dot{q}_a\alpha_{11} + \dot{q}_b\alpha_{14} + \dot{q}_c\alpha_{14} + \dot{q}_C\alpha_{13} + \dot{q}_P\alpha_{12};$$

$$\dot{U}_B = \dot{q}_a\alpha_{14} + \dot{q}_b\alpha_{11} + \dot{q}_c\alpha_{14} + \dot{q}_C\alpha_{13} + \dot{q}_P\alpha_{12};$$

$$\dot{U}_C = \dot{q}_a\alpha_{14} + \dot{q}_b\alpha_{14} + \dot{q}_c\alpha_{11} + \dot{q}_C\alpha_{13} + \dot{q}_P\alpha_{12};$$

$$\dot{U}_C = (\dot{q}_a + \dot{q}_b + \dot{q}_c)\alpha_{13} + \dot{q}_C\alpha_{33} + \dot{q}_P\alpha_{15};$$

$$\dot{U}_P = (\dot{q}_a + \dot{q}_b + \dot{q}_c)\alpha_{12} + \dot{q}_C\alpha_{15} + \dot{q}_P\alpha_{22},$$

where $\dot{U}_C$ and $\dot{U}_P$ are the voltage of the contact network and power wire relative to the ground and $\dot{q}_i$ are the charges of *i*-th wires.

When composing Eqs. (4), we assume that the intrinsic potential coefficients of the OPL wires are equal to each other and the mutual potential coefficients of the OPL and HVPW wires are also equal [11]. After simple simplifications, the zero-sequence voltages of phase voltages of the OPLs are determined from the following relation:

$$\dot{U}_0 = \left[\left(\dot{U}_C\frac{\alpha_{13}}{\alpha_{11}\alpha_{33} - \alpha_{13}^2} + \dot{U}_P\frac{\alpha_{12}}{\alpha_{11}\alpha_{22} - \alpha_{12}^2}\right)\right] \times \frac{(\alpha_{11}\alpha_{33} - \alpha_{13}^2)(\alpha_{11}\alpha_{22} - \alpha_{12}^2)}{\alpha_{13}(\alpha_{11}\alpha_{22} - \alpha_{12}^2) + \alpha_{12}(\alpha_{11}\alpha_{33} - \alpha_{13}^2)}.$$

It is established that, with an insignificant error, the voltage induced in the OPL can be determined from the expression

$$\dot{U}_0 = \frac{\dot{U}_P C_1 + \dot{U}_C C_2}{C_1 + C_2 + C_\Phi},$$

where the capacitance between the OPL wire and the high-voltage wire due to its proximity to the OPL is

$$C_1 = \frac{\alpha_{12}}{\alpha_{11}\alpha_{22} - \alpha_{12}^2},$$

while the capacitance between the OPL wire and the contact network is

$$C_2 = \frac{\alpha_{13}}{\alpha_{11}\alpha_{22} - \alpha_{13}^2}.$$

When arranging the wires according to the diagram in Fig. 4, the capacity of the OPL wires relative to the ground [11] is

$$C_{\Phi} = \frac{2\pi\varepsilon_0}{\ln \dfrac{2h_D}{R^3\sqrt{(4h^2 + D^2)\sqrt{h^2 + D^2}}}},$$

where ε_0 is the dielectric constant of air, h is the height of the OPL suspension above the upper track structure, D is the distance between the nearest OPL wires, and R is the radius of the OPL wire.

In power supply systems with an HVPW, when a 20-kV OPL is on the contact network supports, the zero-sequence voltage significantly exceeds the permissible value of 1735 V [12] and reaches several kV. To limit the zero-sequence voltage to the permissible values, zero-sequence voltage filters introduced on the network of electrified railways may be used [10].

However, given the special requirements for ensuring train traffic safety at heavy and high-speed sections, it is advisable to place OPL wires on separate supports outside the reserved strip. The necessity of making such a decision is also determined by preventing the HVPW voltage from getting on the OPL wire in the case of its possible breakage.

REFERENCES

1. Markvardt, K.G., *Elektrosnabzhenie elektrifitsirovannykh zheleznykh dorog* (Power Supply of Electrified Railways), Moscow: *Transport*, 1982.
2. Mamoshin, R.R., *Povyshenie kachestva energii na tyagovykh podstantsiyakh peremennogo toka* (Improvement of Energy Quality on Traction Substations of AC Roads), Moscow: *Transport*, 1973.
3. Kosarev, A.B., *Osnovy teorii elektromagnitnoi sovmestimosti sistem tyagovogo elektrosnabzheniya peremennogo toka* (Theory of the Electromagnetic Compatibility of AC Traction Power Systems), Moscow: INTEKST, 2004.
4. Asanov, T.K., Kosarev, B.I., Karaev, R.I., and Petukhova, S.Yu., USSR Inventor's Certificate no. 1689143, *Byull. Izobret.*, 1991, no. 4.
5. Kosarev, A.B. and Kosarev, B.I., *Osnovy elektromagnitnoi bezopasnosti sistem elektrosnabzheniya zheleznodorozhnogo transporta* (Electromagnetic Safety of the Power Supply System of Railway Transport), Moscow: INTEKST, 2008.
6. Dolginov, A.I., *Tekhnika vysokikh napryazhenii v elektroenergetike* (High-Voltage Equipment in Power Supply Industry), Moscow: Energiya, 1968.
7. Karaev, R.I. and Kosarev, B.I., Substitute schemes of a steel rail in transitional period, *Elektrichestvo*, 1968, no. 7.
8. Fel'dbaum, A.A., *Vvedenie v teoriyu nelineinykh tsepei* (Introduction into the Theory of Nonlinear Circuits), Moscow: Gosenergoizdat, 1948.
9. Karyakin, R.N., *Tyagovye seti peremennogo toka* (AC Traction Networks), Moscow: *Transport*, 1988.
10. Kosarev, A.B., Kosarev, B.I., and Serbinenko, D.V., *Elektromagnitnye protsessy v sistemakh energosnabzheniya zheleznykh dorog peremennogo toka* (Electromagnetic Processes in Power Supply Systems of AC Railways), Moscow: VMG-Print, 2015..
11. Neiman, L.R. and Kalantarov, P.L., *Teoreticheskie osnovy elektrotekhniki. Tom III. Teoriya elektromagnitnogo polya* (Theory of Electrical Engineering, Vol. 3: Theory of Electromagnetic Field), Leningrad: Gosenergoizdat, 1959.
12. *Pravila ustroistva sistemy tyagovogo elektrosnabzheniya zheleznykh dorog Rossiiskoi Federatsii* (Regulation for Organization of the System of Traction Power Supply of Railways in Russian Federation), Moscow: *Transport*, 1999.

Translated by A. Ivanov