Journal of Mathematical Biology (2022) 85:67
https://doi.org/10.1007/s00285-022-01795-3

Mathematical Biology

Homeostasis and injectivity: a reaction network perspective

Gheorghe Craciun[1] · Abhishek Deshpande[2]

Received: 30 April 2021 / Revised: 2 June 2022 / Accepted: 25 August 2022 /
Published online: 16 November 2022
© The Author(s), under exclusive licence to Springer-Verlag GmbH Germany, part of Springer Nature 2022

Abstract
Homeostasis represents the idea that a feature may remain invariant despite changes in some external parameters. We establish a connection between homeostasis and *injectivity* for reaction network models. In particular, we show that a reaction network cannot exhibit homeostasis if a modified version of the network (which we call *homeostasis-associated network*) is injective. We provide examples of reaction networks which can or cannot exhibit homeostasis by analyzing the injectivity of their homeostasis-associated networks.

Keywords Homeostasis · Directed Species Reaction graph · Injectivity · Reaction networks

Mathematics Subject Classification 37N25 · 80A30 · 92C45 · 92E20 · 14M25

1 Introduction

Coined by Cannon (1926) in 1926, the idea of *homeostasis* has its roots in the work of Bernard (1898), and refers to a regulatory mechanism by which a feature maintains a steady state that is not perturbed by changes in the environment. Often, homeostasis involves the use of negative feedback loops (Ma et al. 2009; Golubitsky and Wang 2020) that help restore a feature to its steady state. At the scale of a whole organism, homeostasis manifests itself in many forms; some prominent examples include the maintenance of body temperature, blood sugar level, concentration of ions in body

✉ Abhishek Deshpande
deshpande8@wisc.edu

Gheorghe Craciun
craciun@math.wisc.edu

1 Department of Mathematics and Department of Biomolecular Chemistry, University of Wisconsin-Madison, Madison, USA

2 Department of Mathematics, University of Wisconsin-Madison, Madison, USA

fluids with changes in the external environment. Homeostasis is also exhibited in intracellular metabolism, where certain concentration remain almost unperturbed with change in concentrations of amino acids (Reed et al. 2017).

As noted in Reed et al. (2017), homeostasis does not imply that the whole system remains invariant with change in external variables. In fact, changes in external variables can cause changes in certain internal variables, while other internal variables remain almost unchanged. In recent years there has been a lot of interest in identifying and analyzing homeostasis in mathematical models of biological interaction systems (Golubitsky and Stewart 2017; Nijhout and Reed 2014; Reed et al. 2017; Nijhout et al. 2014; Golubitsky and Stewart 2018; Tang and McMillen 2016). Some of this renewed interest started with the mathematical analysis of homeostasis in the context of the folate and methionine metabolism (Nijhout et al. 2004; Reed et al. 2017).

While there is no universally accepted mathematical definition of homeostasis, here we focus mostly on the notion of *infinitesimal homeostasis* for input-output systems, as introduced by Golubitsky and Stewart in Golubitsky and Stewart (2017) and further refined in Wang et al. (2020), Golubitsky et al. (2020). Our main interest is to analyze homeostasis from the point of view of *reaction network theory* (Feinberg 1979, 2019; Yu and Craciun 2018).

This paper is organized as follows. In Sect. 2, we define reaction networks and related notions, including the notion of *injective reaction network*. In Sect. 3, we introduce homeostasis as the capacity of a feature to be robust to change in the parameters of the system. We present a procedure for checking whether a reaction network may admit homeostasis by constructing a modified network and checking if it is injective (see Theorem 3.6). We also describe a sufficient condition for *perfect homeostasis* (see Theorem 3.8). In Sect. 4 we present several examples of reaction networks for which their capacity to exhibit homeostasis can be analyzed using the procedure described in Sect. 3.

2 Euclidean embedded graphs and reaction networks

An *Euclidean embedded graph* is a directed graph $\mathcal{G} = (V, E)$, where $V \subset \mathbb{R}^n$ and E are the sets of vertices and edges respectively. Associated with every edge $(\boldsymbol{y}, \boldsymbol{y}') \in E$ is a source vertex $\boldsymbol{y} \in V$ and a target vertex $\boldsymbol{y}' \in V$. An edge $(\boldsymbol{y}, \boldsymbol{y}') \in E$ will also be denoted by $\boldsymbol{y} \to \boldsymbol{y}' \in E$.

A *reaction network* is a Euclidean embedded graph $\mathcal{G} = (V, E)$, where $V \subset \mathbb{R}^n_{\geq 0}$ and E is the set of edges that correspond to reactions in the network (Craciun 2015, 2019). An alternative way of describing a reaction network is by specifying a set of species and a set of reactions. For example, consider the set of species $\{X_1, X_2\}$ and the set of reactions $\{2X_1 \to 3X_2,\ X_1 + X_2 \to 3X_1\}$. The corresponding Euclidean embedded graph lies in $\mathbb{R}^2_{\geq 0}$ and has two edges: one edge from $(2, 0)$ to $(0, 3)$ and one edge from $(1, 1)$ to $(3, 0)$, where the vertex vectors are formed by the coefficients of the species X_1 and X_2 on the reactant side and product side, respectively.

The *s*toichiometric subspace of a reaction network is the linear subspace given by $\text{span}\{\boldsymbol{y}' - \boldsymbol{y} \mid \boldsymbol{y} \to \boldsymbol{y}' \in E\}$. Given a point $\boldsymbol{x}_0 \in \mathbb{R}^n_{>0}$, the positive stoichiometric compatibility class of $\boldsymbol{x}_0$ is the affine subspace $(\boldsymbol{x}_0 + S) \cap \mathbb{R}^n_{>0}$.

There exist many choices for modelling the kinetics of reaction networks. The most common one is based on the *law of mass-action* (Voit et al. 2015; Guldberg and Waage 1864; Yu and Craciun 2018; Gunawardena 2003; Feinberg 1979) where, associated with each reaction $\boldsymbol{y} \to \boldsymbol{y}'$ there is a *rate constant* $k_{\boldsymbol{y}\to\boldsymbol{y}'} > 0$, and the dynamics of the network is given by

$$\frac{d\boldsymbol{x}}{dt} = \sum_{\boldsymbol{y}\to\boldsymbol{y}'\in E} k_{\boldsymbol{y}\to\boldsymbol{y}'}\boldsymbol{x}^{\boldsymbol{y}}(\boldsymbol{y}' - \boldsymbol{y}), \tag{1}$$

where $\boldsymbol{x} \in \mathbb{R}^n_{>0}$ and $\boldsymbol{x}^{\boldsymbol{y}} = x_1^{y_1}x_2^{y_2}\cdots x_n^{y_n}$. Let $\boldsymbol{k} = (k_{\boldsymbol{y}\to\boldsymbol{y}'})_{\boldsymbol{y}\to\boldsymbol{y}'\in E}$ denote the vector of rate constants and $\boldsymbol{f}(\boldsymbol{x},\boldsymbol{k})$ denote the right-hand side of Eq. (1). The Jacobian corresponding to the dynamical system (1) is given by the matrix

$$J(\boldsymbol{x},\boldsymbol{k}) = \begin{pmatrix} \frac{\partial f_1(\boldsymbol{x},\boldsymbol{k})}{\partial x_1} & \frac{\partial f_1(\boldsymbol{x},\boldsymbol{k})}{\partial x_2} & \cdots & \frac{\partial f_1(\boldsymbol{x},\boldsymbol{k})}{\partial x_n} \\ \frac{\partial f_2(\boldsymbol{x},\boldsymbol{k}))}{\partial x_1} & \frac{\partial f_2(\boldsymbol{x},\boldsymbol{k})}{\partial x_2} & \cdots & \frac{\partial f_2(\boldsymbol{x},\boldsymbol{k})}{\partial x_n} \\ \vdots & \vdots & & \\ \frac{\partial f_n(\boldsymbol{x},\boldsymbol{k})}{\partial x_1} & \frac{\partial f_2(\boldsymbol{x},\boldsymbol{k})}{\partial x_2} & \cdots & \frac{\partial f_n(\boldsymbol{x},\boldsymbol{k})}{\partial x_n} \end{pmatrix},$$

'where $\boldsymbol{x} = (x_1, x_2, ..., x_n)$ and $f_i(\boldsymbol{x},\boldsymbol{k})$ is the right-hand side of the dynamics corresponding to species X_i. A point $\boldsymbol{x}_0 \in \mathbb{R}^n_{>0}$ is said to be an *equilibrium* of (1) if $\sum_{\boldsymbol{y}\to\boldsymbol{y}'\in E} k_{\boldsymbol{y}\to\boldsymbol{y}'}\boldsymbol{x}_0^{\boldsymbol{y}}(\boldsymbol{y}' - \boldsymbol{y}) = 0$. An equilibrium point $\boldsymbol{x}_0 \in \mathbb{R}^n_{>0}$ of (1) is said to be *complex balanced* if for every vertex $\boldsymbol{y}$ in the reaction network we have

$$\sum_{\boldsymbol{y}\to\boldsymbol{y}'\in E} k_{\boldsymbol{y}\to\boldsymbol{y}'}\boldsymbol{x}_0^{\boldsymbol{y}} = \sum_{\boldsymbol{y}'\to\boldsymbol{y}\in E} k_{\boldsymbol{y}\to\boldsymbol{y}'}\boldsymbol{x}_0^{\boldsymbol{y}'}. \tag{2}$$

An equilibrium $\boldsymbol{x}_0 \in \mathbb{R}^n_{>0}$ is said to be a *linearly stable equilibrium* of (1) if the eigenvalues of the Jacobian of (1) evaluated at the point $\boldsymbol{x}_0$ have negative real parts (Hassan 2002). It is known from Siegel and Johnston (2008, Theorem 5.2) and Feinberg (2019, 15.2.2) that complex balanced equilibria are linearly stable.

Recall the $\boldsymbol{f}(\boldsymbol{x},\boldsymbol{k})$ denotes the right hand side of Eq. (1). Now consider the function $\boldsymbol{x} \to \boldsymbol{f}(\boldsymbol{x},\boldsymbol{k})$. A reaction network $\mathcal{G}$ is said to be *injective* if the function $\boldsymbol{x} \to \boldsymbol{f}(\boldsymbol{x},\boldsymbol{k})$ corresponding to the dynamics given by (1) is injective for all $\boldsymbol{k}$. It follows that an injective reaction network cannot have multiple equilibria.

In general, it is extremely difficult to determine whether the function $\boldsymbol{x} \to \boldsymbol{f}(\boldsymbol{x},\boldsymbol{k})$ is injective or not. Necessary and sufficient conditions for a reaction network to be injective are given by Theorems 3.1, 3.2, and 3.3 in Craciun and Feinberg (2005), which we summarize here:

Theorem 2.1 *Consider a reaction network $\mathcal{G}$ with species $X_1, X_2, ..., X_n$. Let $J(\boldsymbol{x},\boldsymbol{k})$ denote the Jacobian matrix corresponding to the dynamics generated by $\mathcal{G}$. Then the following hold:*

1. *$\mathcal{G}$ is injective if and only if $det(J(\boldsymbol{x}, \boldsymbol{k}))$ is non-zero for every $\boldsymbol{x} \in \mathbb{R}^n_{>0}$ and for all choices of rate constants $\boldsymbol{k}$.*
2. *There is a one-to-one correspondence between the coefficients in the expansion of $det(J(\boldsymbol{x}, \boldsymbol{k}))$ and products of the form $det(\boldsymbol{y}_1, \boldsymbol{y}_2, ..., \boldsymbol{y}_n)det(\boldsymbol{y}_1 - \boldsymbol{y}'_1, \boldsymbol{y}_2 - \boldsymbol{y}'_2, ..., \boldsymbol{y}_n - \boldsymbol{y}'_n)$ for all choices of n reactions $\{\boldsymbol{y}_1 \to \boldsymbol{y}'_1, \boldsymbol{y}_2 \to \boldsymbol{y}'_2, ..., \boldsymbol{y}_n \to \boldsymbol{y}'_n\}$ in $\mathcal{G}$.*
3. *$\mathcal{G}$ is injective if and only if for any choice of n reactions $\{\boldsymbol{y}_1 \to \boldsymbol{y}'_1, \boldsymbol{y}_2 \to \boldsymbol{y}'_2, ..., \boldsymbol{y}_n \to \boldsymbol{y}'_n\}$ in $\mathcal{G}$ all the products of the form*

$$det(\boldsymbol{y}_1, \boldsymbol{y}_2, ..., \boldsymbol{y}_n)det(\boldsymbol{y}_1 - \boldsymbol{y}'_1, \boldsymbol{y}_2 - \boldsymbol{y}'_2, ..., \boldsymbol{y}_n - \boldsymbol{y}'_n)$$

have the same sign, and at least one such product is non-zero.

A useful tool for analyzing injectivity is the *directed species reaction graph* (abbreviated as *DSR graph*) first introduced in Banaji and Craciun (2009). In what follows, we describe some terminology in the context of DSR graphs. More details and examples can be found in Banaji and Craciun (2009), Banaji and Pantea (2016), Yu et al. (2022).

Given a reaction network $\mathcal{G}$, the DSR graph of $\mathcal{G}$ is a *bipartite* graph whose nodes are the species and the reactions of $\mathcal{G}$ (where a pair of reversible reactions shares a single reaction node; moreover, "inflow reactions" of the form $X_i \to \emptyset$ and "outflow reactions" of the form $\emptyset \to X_i$ are disregarded). Edges of the DSR graph always connect a species node to a reaction node (or vice-versa), and never connect two species nodes or two reaction nodes (see Fig. 1 for an example). More precisely, we have an edge between a specific species and a specific reaction if that species appears in that reaction. If a species appears in the *reactant* side of a reaction, then the edge is a *negative edge*, and if it appears in the *product* side of a reaction, then the edge is a *positive edge*[1]. We will denote a negative edge in the DSR graph with a *dashed line*, and a positive edge with a *solid line*. For irreversible reactions, edges that connect reactions to *product* species are *directed* from reactions to species. Each edge is *labeled* with the stoichiometric coefficient that its endpoint species has within its endpoint reaction[2]. *Cycles* in the DSR graph play an especially important role, and we need to define several types of cycles. Let $|C|$ denote the length of a cycle in the DSR graph. A cycle is an *e-cycle* (even cycle) if the number of positive edges has the same parity as the number $\frac{|C|}{2}$. Otherwise, it is an *o-cycle* (odd cycle). A cycle is a *s-cycle* if all its edge labels are finite and

$$\prod_{i=1}^{|C|/2} l(e_{2i-1}) = \prod_{i=1}^{|C|/2} l(e_{2i}),$$

where $l(e)$ denotes the stoichiometric label of the edge e. We will say that two cycles have an *odd intersection* if their orientation is compatible and every component of

[1] For reversible reactions we fix an arbitrary choice of "reaction" and "product".

[2] There is a special case to this rule: for "catalytic" reactions of the form $\alpha X_1 + y \to \alpha X_1 + y'$ (where y and y' do not contain X_1) the edge from X_1 to this reaction gets a label of "∞", and is directed from the species node to the reaction node.

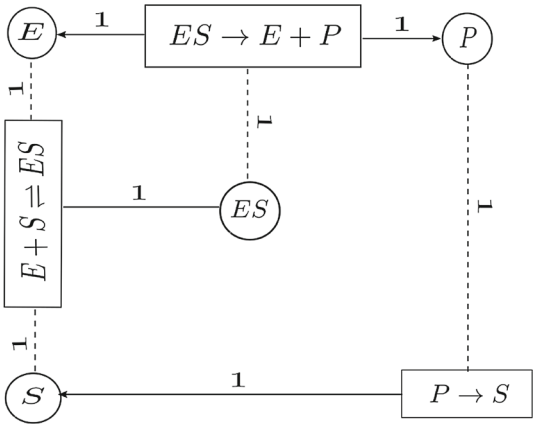

Fig. 1 DSR graph for the network given by the following reactions: $\{E + S \rightleftharpoons ES, ES \to E + P, P \to S, E \to \emptyset, P \to \emptyset\}$

their intersection contains an odd number of edges. Figure 1 shows the DSR graph for the network consisting of the following reactions: $\{E+S \rightleftharpoons ES, ES \to E+P, P \to S, E \to \emptyset, P \to \emptyset\}$.

Theorem 2.2 ***A DSR criterion*** Banaji and Craciun (2009)*: Consider a reaction network $\mathcal{G}$. Suppose the following conditions are satisfied:*

1. *Every e-cycle is a s-cycle in the DSR graph of $\mathcal{G}$.*
2. *No two e-cycles have an odd intersection in the DSR graph of $\mathcal{G}$.*
3. *There exists a choice of n reactions $\{\boldsymbol{y}_1 \to \boldsymbol{y}'_1, \boldsymbol{y}_2 \to \boldsymbol{y}'_2, \boldsymbol{y}_3 \to \boldsymbol{y}'_3, ..., \boldsymbol{y}_n \to \boldsymbol{y}'_n\}$ in $\mathcal{G}$ such that $det(\boldsymbol{y}_1, \boldsymbol{y}_2, \boldsymbol{y}_3, ..., \boldsymbol{y}_n) det(\boldsymbol{y}'_1 - \boldsymbol{y}_1, \boldsymbol{y}'_2 - \boldsymbol{y}_2, \boldsymbol{y}'_3 - \boldsymbol{y}_3, ..., \boldsymbol{y}'_n - \boldsymbol{y}_n) \neq 0$.*

Then $\mathcal{G}$ is injective.

Consider the DSR graph in Fig. 1. This has two cycles given by $E - (E + S \rightleftharpoons ES) - ES - (ES \to E + P) - E$ and $ES - (ES \to E + P) - P - (P \to S) - S - (E + S \rightleftharpoons ES) - ES$. Both these cycles are e-cycles and s-cycles since the number of positive edges has the same parity as half the length of the respective cycle. The intersection of these two e-cycles is the path $(E + S \rightleftharpoons ES) - ES - (ES \to E + P)$ and this is not an odd intersection since it contains two edges (which is an even number). Further, if we choose four reactions from the network given by the following: $\{E + S \to ES, ES \to E + P, E \to \emptyset, P \to \emptyset\}$, then we have

$$det(\boldsymbol{y}_1, \boldsymbol{y}_2, \boldsymbol{y}_3, \boldsymbol{y}_4) \cdot det(\boldsymbol{y}'_1 - \boldsymbol{y}_1, \boldsymbol{y}'_2 - \boldsymbol{y}_2, \boldsymbol{y}'_3 - \boldsymbol{y}_3, y'_4 - \boldsymbol{y}_4) = det \begin{pmatrix} 1 & 0 & 1 & 0 \\ 1 & 0 & 0 & 0 \\ 0 & 1 & 0 & 0 \\ 0 & 0 & 0 & 1 \end{pmatrix} \cdot$$

$det \begin{pmatrix} -1 & 1 & -1 & 0 \\ -1 & 0 & 0 & 0 \\ 1 & -1 & 0 & 0 \\ 0 & 1 & 0 & -1 \end{pmatrix} = 1 \cdot 1 \neq 0$. Therefore, by Theorem 2.2 this reaction network is injective.

3 Homeostasis

The ability of a feature to remain invariant when certain parameters of the system are changed is the essential idea behind homeostasis. A common example of homeostasis is exhibited when an organism maintains its body temperature despite fluctuations in the temperature of the environment. The temperature of the body varies linearly with temperature for low and high values of the environment temperature; however for moderate values of the environment temperature, the body temperature remains approximately constant. This variation of body temperature with the environment resembles the shape of a "chair" (Nijhout et al. 2004; Nijhout and Reed 2014). In Golubitsky and Stewart (2017), this "chair" form provides inspiration for a definition of homeostasis in the context of singularity theory. In particular, the idea of homeostasis corresponds to the derivative of an output (homeostasis) variable with respect to an external input being zero at a certain point. As outlined in Golubitsky and Stewart (2017), we consider the following setup: Let $\boldsymbol{x} = (x_1, x_2, ..., x_n)$ and consider

$$\frac{d\boldsymbol{x}}{dt} = \mathcal{F}(\boldsymbol{x}, \zeta) \tag{3}$$

given by

$$\begin{aligned} \frac{dx_1}{dt} &= f_1(x_1, x_2, ..., x_n) + \zeta \\ \frac{dx_2}{dt} &= f_2(x_1, x_2, ..., x_n) \\ \vdots &= \vdots \\ \frac{dx_n}{dt} &= f_n(x_1, x_2, ..., x_n) \end{aligned} \tag{4}$$

As in Golubitsky and Stewart (2017), *throughout this paper* we assume that the variable x_1 is the input variable, and the output variable (which may or may not exhibit homeostatis) is x_n. We will also assume that there exists a linearly stable equilibrium of (4) given by $(\boldsymbol{x}_0, \zeta_0)$. By the implicit function theorem, there exists solutions $\tilde{\boldsymbol{x}}(\zeta)$ in a neighbourhood of the equilibrium $(\boldsymbol{x}_0, \zeta_0)$ satisfying $\mathcal{F}(\tilde{\boldsymbol{x}}(\zeta), \zeta) = 0$. In particular, this implies that $\tilde{\boldsymbol{x}}(\zeta)$ is also a linearly stable equilibrium, and depends continuously on ζ in a neighbourhood of the equilibrium $(\boldsymbol{x}_0, \zeta_0)$. Following Golubitsky and Stewart (2017), Golubitsky and Wang (2020), Wang et al. (2020), we define infinitesimal homeostasis as follows.

Definition 3.1 Consider a dynamical system of the form (4). Denote by $\tilde{\boldsymbol{x}}(\zeta)$ a linearly stable equilibrium of (4) in the neighbourhood of $(\boldsymbol{x}_0, \zeta_0)$. We say that we have *infinitesimal homeostasis* at $(\boldsymbol{x}_0, \zeta_0)$ if $\left.\frac{d\tilde{x}_n}{d\zeta}\right|_{(\boldsymbol{x}_0, \zeta_0)} = 0$.

In other words, an equilibrium point exhibits infinitesimal homeostasis for the n-th variable x_n if the derivative of the value of this variable at equilibrium with respect to

the external input parameter ζ is zero. As shown in Golubitsky and Stewart (2017), this derivative is a scalar multiple of a reduced Jacobian of the system:

Theorem 3.2 *Denote by J the Jacobian matrix of the right-hand side of the system (4). Under the same assumptions as in Definition 3.1, we have infinitesimal homeostasis at $(\boldsymbol{x}_0, \zeta_0)$ if and only if $det(B)\Big|_{(\boldsymbol{x}_0,\zeta_0)} = 0$ where B is the $(n-1)\times(n-1)$ minor of the Jacobian J obtained by deleting the first row and last column of J.*

Definition 3.3 Consider a dynamical system of the form (4). Denote by $\tilde{\boldsymbol{x}}(\zeta)$ a linearly stable equilibrium of (4) in the neighbourhood of $(\boldsymbol{x}_0, \zeta_0)$. We say that we have *perfect homeostasis* at $(\boldsymbol{x}_0, \zeta_0)$ if $\frac{d\tilde{x}_n}{d\zeta}\Big|_{(\boldsymbol{x}_0,\zeta_0)} = 0$ for all values of ζ on some interval containing ζ_0.

Remark 3.4 As remarked in Wang et al. (2020), there exists several forms of homeostasis. Specifically, Definition 3.1 refers to *infinitesimal homeostasis*, which requires the derivative of the input-output function to be zero at a point. The idea of *perfect homeostasis* refers to the situation when the derivative of the input-output function vanishes on an entire interval. Definition 3.3 illustrates this fact. The notion of *near perfect homeostasis* refers to the situation when the input-output function is approximately constant in a neighbourhood of a point.

Definition 3.5 Consider a reaction network $\mathcal{G}$. The *homeostasis-associated reaction network* of $\mathcal{G}$, denoted by $\tilde{\mathcal{G}}$, is obtained from $\mathcal{G}$ as follows

Step 1: For each reaction in $\mathcal{G}$ involving the species X_1, modify the reaction such that stoichiometric coefficient of X_1 in the reactant is the same as the stoichiometric coefficient of X_1 in the product.

Step 2: Add the reaction $X_n \to X_1$.

Theorem 3.6 *Consider a reaction network $\mathcal{G}$ with species $X_1, X_2, ..., X_n$. Let $\tilde{\mathcal{G}}$ be the homeostasis-associated reaction network of $\mathcal{G}$. If the reaction network $\tilde{\mathcal{G}}$ is injective, then the mass-action dynamical system generated by $\mathcal{G}$ cannot exhibit infinitesimal homeostasis (with input X_1 and output X_n) for any choices of rate constants.*

Proof Let J and $\tilde{J}$ denote the Jacobians coresponding to the dynamical systems generated by $\mathcal{G}$ and $\tilde{\mathcal{G}}$ respectively. Step 1 of the procedure in Definition 3.5 makes the first row of $\tilde{J}$ zero. Step 2 of Definition 3.5 generates a non-zero element in the top right corner of the $\tilde{J}$. Therefore, the Jacobian $\tilde{J}$ has the first row consisting entirely of zeros except the last element. In addition, $\tilde{J}$ has the same $(n-1)\times(n-1)$ minor B as obtained by deleting the first row and last column of J. Expanding along the first row of $\tilde{J}$, we get that $det(\tilde{J}) = k_{n,1}det(B)$, where $k_{n,1}$ is the rate constant corresponding to the reaction $X_n \to X_1$. Since $\tilde{\mathcal{G}}$ is injective, by Theorem 2.1 we have $det(\tilde{J}(\boldsymbol{x})) \neq 0$ for every $\boldsymbol{x} \in \mathbb{R}^n_{>0}$. This implies that $det(B(\boldsymbol{x})) \neq 0$ for every $\boldsymbol{x} \in \mathbb{R}^n_{>0}$ and hence $\mathcal{G}$ cannot exhibit infinitesimal homeostasis for any choices of rate constants. □

Corollary 3.7 *Consider a reaction network $\mathcal{G}$ with species $X_1, X_2, ..., X_n$. Let $\tilde{\mathcal{G}}$ be the homeostasis-associated reaction network of $\mathcal{G}$. If the reaction network $\tilde{\mathcal{G}}$ satisfies*

the conditions 1, 2 and 3 in Theorem 2.2, then the mass-action dynamical system generated by $\mathcal{G}$ cannot exhibit infinitesimal homeostasis (with input X_1 and output X_n) for any choices of rate constants.

Proof This follows from Theorems 3.6 and 2.2. □

Theorem 3.8 *Consider a reaction network $\mathcal{G}$ with species $X_1, X_2, ..., X_n$. Let $\tilde{\mathcal{G}}$ be the homeostasis-associated reaction network of $\mathcal{G}$. Let $\tilde{J}(\boldsymbol{x}))$ denote the Jacobian matrix corresponding to the right hand side of the dynamical system generated by $\tilde{\mathcal{G}}$. If $det(\tilde{J}(\boldsymbol{x})) = 0$ for every $\boldsymbol{x} \in \mathbb{R}^n_{>0}$, then any mass-action dynamical system generated by $\mathcal{G}$ must exhibit perfect homeostasis (with input X_1 and output X_n) at any linearly stable equilibrium.*

Proof Let J and $\tilde{J}$ denote the Jacobians coresponding to the dynamical systems generated by $\mathcal{G}$ and $\tilde{\mathcal{G}}$ respectively. Arguing as in the Proof of Theorem 3.6, we get that $det(\tilde{J}) = k_{n,1} det(B)$, where $k_{n,1}$ is the rate constant corresponding to the reaction $X_n \rightarrow X_1$. Since $det(\tilde{J}(\boldsymbol{x})) = 0$ for every $\boldsymbol{x} \in \mathbb{R}^n_{>0}$, we have $det(B) = 0$ for every $\boldsymbol{x} \in \mathbb{R}^n_{>0}$, where B is the $(n-1) \times (n-1)$ minor of the Jacobian $\tilde{J}$ obtained by deleting the first row and last column of $\tilde{J}$. This implies that any mass-action dynamical system generated by $\mathcal{G}$ must exhibit perfect homeostasis (with input X_1 and output X_n) at any linearly stable equilibrium. □

Corollary 3.9 *Consider a reaction network $\mathcal{G}$ with species $X_1, X_2, ..., X_n$. Let $\tilde{\mathcal{G}}$ be the homeostasis-associated reaction network of $\mathcal{G}$. If the graph $\tilde{\mathcal{G}}$ does not satisfy condition 3 in Theorem 2.2, then any mass-action dynamical system generated by $\mathcal{G}$ must exhibit perfect homeostasis (with input X_1 and output X_n) at any linearly stable equilibrium.*

Proof This follows from Theorems 3.8 and 2.2. □

Remark 3.10 Recall that the notion of infinitesimal homeostasis (as described by Definition 3.1) assumes the existence of a linearly stable equilibrium $(\tilde{x}_1, \tilde{x}_2, ..., \tilde{x}_n)$. For a mass-action system generated by a reaction network $\mathcal{G}$ this implicitly says that the dimension of the stoichiometric subspace of $\mathcal{G}$ must be n. In other words, the notion of infinitesimal homeostasis (as described by Definition 3.1) *cannot* ever apply to a mass-action system that has one or more linear conservation laws (i.e., for which the dimension of the stoichiometric subspace of $\mathcal{G}$ is less than n).

4 Examples

The goal of this section is to demonstrate examples of reaction networks that can or cannot exhibit infinitesimal homeostasis using the procedure outlined in Definition 3.5.

4.1 A reaction network that does not exhibit infinitesimal homeostasis for any choice of network parameters

The biological motivation for the following example comes from "sequestration networks" as defined in Joshi and Shiu (2015), Félix et al. (2016). In particular, they find

instances of such networks in the transcription mechanism of E.coli. The trp operon contains genes that encode for the amino acid tryptophan. The operon is turned "off" or "on" depending upon the levels of tryptophan. When the tryptophan levels are low, it is turned "off" and when the levels of tryptophan are high, it is turned "on". In the presence of tryptophan, the trp repressor can bind to the operon sites and prevent the expression of the operon. This can be seen as a sequestration reaction $X_1 + X_2 \to \emptyset$, where X_1 is the tryptophan and X_2 is the trp operon. Taking our cue from this, we consider the following sequestration network.

Example Consider the reaction network $\mathcal{G}_1$ given by:

$$\begin{aligned} X_1 + X_2 &\to \emptyset \\ X_2 + X_3 &\to \emptyset \\ X_3 + X_4 &\to \emptyset \\ X_4 &\to X_1 \\ \emptyset &\overset{\zeta}{\rightleftharpoons} X_1 \\ \emptyset &\rightleftharpoons X_2 \\ \emptyset &\rightleftharpoons X_3 \\ \emptyset &\rightleftharpoons X_4 \end{aligned} \tag{5}$$

The homeostasis-associated reaction network corresponding to $\mathcal{G}_1$ will be denoted by $\tilde{\mathcal{G}}_1$ and is given by

$$\begin{aligned} X_1 + X_2 &\to X_1 \\ X_2 + X_3 &\to \emptyset \\ X_3 + X_4 &\to \emptyset \\ X_4 &\to X_1 \\ \emptyset &\rightleftharpoons X_2 \\ \emptyset &\rightleftharpoons X_3 \\ \emptyset &\rightleftharpoons X_4 \end{aligned} \tag{6}$$

Note that when we apply Step 1 of the procedure listed in Definition 3.1 to the reaction $X_4 \to X_1$, we get the reaction $X_4 \to \emptyset$. Step 2 of the procedure then adds the reaction $X_4 \to X_1$. As a consequence, we get the homeostasis-associated network $\tilde{\mathcal{G}}_1$, where the reaction $X_4 \to X_1$ has a larger rate constant as compared to the rate constant of the same reaction in $\mathcal{G}_1$. The DSR graph corresponding to the network $\tilde{\mathcal{G}}_1$ is given in Fig. 2

This DSR graph possesses exactly one oriented cycle given by $(X_3) - (X_3 + X_4 \to \emptyset) - (X_4) - (X_4 \to X_1) - (X_1) - (X_1 + X_2 \to X_1) - (X_2) - (X_2 + X_3 \to \emptyset) - (X_3)$ which is an o-cycle. As a consequence, conditions 1 and 2 in Theorem 2.2 are satisfied. In addition, if we choose four reactions from $\tilde{\mathcal{G}}_1$ given by $\{X_1 + X_2 \to X_1, X_2 + X_3 \to \emptyset, X_3 + X_4 \to \emptyset, X_4 \to X_1\}$, then we have $det(\boldsymbol{y}_1, \boldsymbol{y}_2, \boldsymbol{y}_3, \boldsymbol{y}_4) \cdot det(\boldsymbol{y}_1' - \boldsymbol{y}_1, \boldsymbol{y}_2' -$

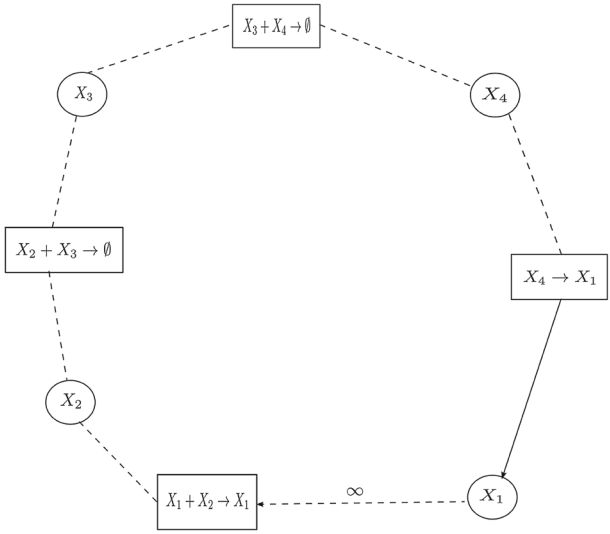

Fig. 2 DSR graph for network $\tilde{G}_1$

$\boldsymbol{y}_2, \boldsymbol{y}_3' - \boldsymbol{y}_3, y_4' - \boldsymbol{y}_4) = det \begin{pmatrix} 1 & 0 & 0 & 0 \\ 1 & 1 & 0 & 0 \\ 0 & 1 & 1 & 0 \\ 0 & 0 & 1 & 1 \end{pmatrix} \cdot det \begin{pmatrix} 0 & 0 & 0 & 1 \\ -1 & -1 & 0 & 0 \\ 0 & -1 & -1 & 0 \\ 0 & 0 & -1 & -1 \end{pmatrix} = 1 \neq 0$. Therefore, condition 3 of Theorem 2.2 is satisfied. Using Corollary 3.7, we get that $\mathcal{G}_1$ cannot exhibit infinitesimal homeostasis for any choices of rate constants.

4.2 A reaction network that does exhibit infinitesimal homeostasis

Example Consider the following network $\mathcal{G}_2$

$$\begin{aligned} 2X_1 &\rightleftharpoons X_2 \\ X_2 + X_3 &\to X_2 \\ X_1 + X_3 &\to X_1 + 2X_3 \\ 2X_3 &\rightleftharpoons X_3 \\ \emptyset &\overset{\zeta}{\rightleftharpoons} X_1 \end{aligned} \tag{7}$$

The network $\mathcal{G}_2$ does not have all the inflow/outflow reactions, but the stoichiometric subspace is full. Using the procedure given in Theorem 3.6, the homeostasis-associated reaction network $\tilde{\mathcal{G}}_2$ is given by the following:

$$\begin{aligned} 2X_1 &\to 2X_1 + X_2 \\ X_2 + X_3 &\to X_2 \\ X_1 + X_3 &\to X_1 + 2X_3 \end{aligned}$$

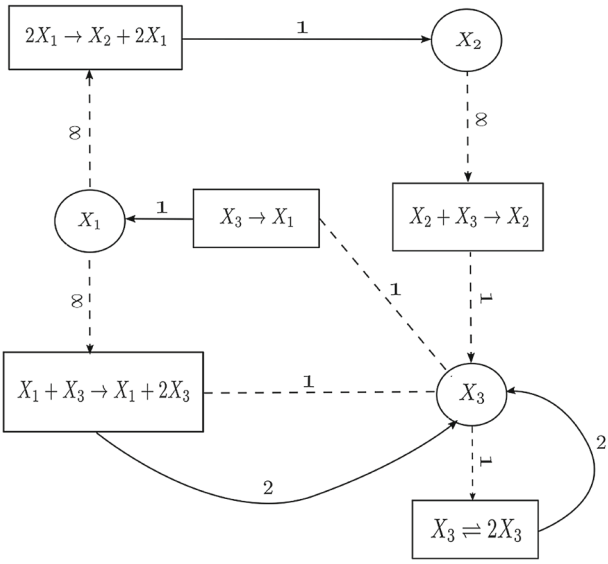

Fig. 3 DSR graph for network $\tilde{G}_2$

$$\begin{aligned} 2X_3 &\rightleftharpoons X_3 \\ X_3 &\to X_1 \\ X_2 &\to \emptyset \end{aligned} \tag{8}$$

Let us analyze the DSR graph corresponding to the network $\tilde{\mathcal{G}}_2$ as shown in Fig. 3. Since condition is not satisfied for the DSR graph of $\tilde{\mathcal{G}}_2$, there is a possibility that the network $\mathcal{G}_2$ can exhibit infinitesimal homeostasis. In particular, $\mathcal{G}_2$ generates a dynamical system given by the following set of differential equations:

$$\begin{aligned} \dot{x_1} &= \zeta - x_1 - 2x_1^2 + 2x_2 \\ \dot{x_2} &= x_1^2 - x_2 \\ \dot{x_3} &= -x_2x_3 + x_1x_3 - x_3^2 + x_3 \end{aligned} \tag{9}$$

This set of differential equations has the steady state given by $(x_1^* = \zeta, x_2^* = \zeta^2, x_3^* = 1 - \zeta + \zeta^2)$. The Jacobian corresponding to 9 is given by

$$J_2 = \begin{pmatrix} -1 - 4x_1 & 2 & 0 \\ 2x_1 & -1 & 0 \\ x_3 & -x_3 & -x_2 + x_1 - 2x_3 + 1 \end{pmatrix}$$

The determinant of the $(n-1) \times (n-1)$ minor of J_2 obtained by deleting its first row and last column is given by $x_3 - 2x_1x_3$ which is 0 at $x_1 = \frac{1}{2}$. We now check the stability of the equilibrium point given by $(x_1^* = \frac{1}{2}, x_2^* = \frac{1}{4}, x_3^* = \frac{3}{4}, \zeta = \frac{1}{2})$. The

Jacobian at this point is given by

$$J_2^* = \begin{pmatrix} -3 & 2 & 0 \\ 1 & -1 & 0 \\ \frac{3}{4} & -\frac{3}{4} & -\frac{1}{4} \end{pmatrix}$$

The Jacobian J_2^* has eigenvalues given by $\lambda_1 = \frac{-1}{4}$, $\lambda_2 = -\sqrt{3} - 2$, $\lambda_3 = -\sqrt{3} + 2$, which are all negative and hence the equilibrium is linearly stable. Therefore the network $\mathcal{G}_2$ exhibits infinitesimal homeostasis at $(x_1^* = \frac{1}{2}, x_2^* = \frac{1}{4}, x_3^* = \frac{3}{4}, \zeta = \frac{1}{2})$.

4.3 A reaction network that exhibits perfect homeostasis

Example Consider the following network $\mathcal{G}_3$

$$\begin{aligned} X_3 + X_1 &\rightarrow X_2 \\ X_2 &\rightarrow X_3 \\ \emptyset &\overset{\zeta}{\rightleftharpoons} X_1 \\ \emptyset &\rightleftharpoons X_3 \end{aligned} \tag{10}$$

The network $\mathcal{G}_3$ generates a dynamical system given by

$$\begin{aligned} \dot{x_1} &= \zeta - x_1 - x_1 x_3 \\ \dot{x_2} &= -x_2 + x_1 x_3 \\ \dot{x_3} &= 1 - x_3 + x_2 - x_1 x_3 \end{aligned} \tag{11}$$

The Jacobian corresponding to Eq. 11 is given by

$$J(x_1, x_2, x_3) = \begin{pmatrix} -1 - x_3 & 0 & -x_1 \\ x_3 & -1 & x_1 \\ -x_3 & 1 & -1 - x_1 \end{pmatrix}$$

The steady-state corresponding to Eq. 11 is given by $(x_1^*, x_2^*, x_3^*) = \left(\frac{\zeta}{2}, \frac{\zeta}{2}, 1\right)$. Given this steady-state parametrization, one can show that the Jacobian with $\zeta = 1$ has all negative eigenvalues given by $\lambda_1 = -1$, $\lambda_2 = \frac{-7+\sqrt{17}}{4}$, $\lambda_3 = \frac{-7-\sqrt{17}}{4}$. Therefore the point $(\frac{1}{2}, \frac{1}{2}, 1)$ is linearly stable.
The homostasis-associated network $\hat{\mathcal{G}}_3$ is given by the following:

$$\begin{aligned} X_3 + X_1 &\rightarrow X_1 + X_2 \\ X_2 &\rightarrow X_3 \\ X_3 &\rightarrow X_1 \\ \emptyset &\rightleftharpoons X_3 \end{aligned} \tag{12}$$

Every term of the form $det(y_1, y_2, y_3)det(y_1'-y_1, y_2'-y_2, y_3'-y_3)$ from this network is zero and hence the deteminant of the Jacobian is zero. This implies that the determinant of B (which is the $(n-1) \times (n-1)$ minor of the Jacobian obtained by deleting its first row and last column) is zero. By Corollary 3.9, we get that the network $\mathcal{G}_3$ has perfect homeostasis at this linearly stable equilibrium.

5 Discussion

In this paper we have analyzed the notion of infinitesimal homeostasis (as introduced in Golubitsky and Stewart 2017), from the point of view of reaction network models. In particular, we have described a relationship between infinitesimal homeostasis and network injectivity, as well as a relationship between perfect homeostasis and the structure of the set of reaction vectors. Moreover, since injectivity of a network can be studied by looking at its directed species reaction graph (DSR graph) (Banaji and Craciun 2009), we have discussed how the DSR graph can be used to analyze homeostasis.

The current notion of infinitesimal homeostasis cannot apply to reaction systems with conservation laws (see Remark 3.10). An important direction for future work would be come up with an appropriate definition and analysis that removes this restriction.

Another interesting direction for future work would be the analysis of possible relationships between homeostasis (and especially *perfect homeostasis*) and *absolute concentration robustness* (ACR). The notion of ACR was first introduced in Shinar and Feinberg (2010), and refers to systems where the value of one of the variables (e.g., species concentration) is the same for all positive steady states of the system. At first, these two notions seem almost identical, but the ACR framework does *not* allow for any changes in parameter values. A deeper exploration of the mathematical relationships between homeostasis and absolute concentration robustness may uncover other network-level conditions for homeostasis.

Another promising direction for future work is the use of various forms of steady state parametrizations (Perez Millan and Dickenstein 2018; Feliu and Wiuf 2013) to analyze infinitesimal homeostasis. Given a certain steady state parametrization, the fact that the derivative of the output variable with respect to an input variable is zero at an equilibrium manifests itself as a property of a system of algebraic equations, whose analysis could provide useful insights into the behaviour of the system. Possible candidates for this work include toric (Pérez Millán et al. 2012) and rational (Thomson and Gunawardena 2009) steady state parametrizations.

Acknowledgements G.C. would like to acknowledge support from NSF grant DMS-2051568. A.D. would like thank the Mathematics Department at University of Wisconsin-Madison for a Van Vleck Visiting Assistant Professorship.

References

Banaji M, Craciun G (2009) Graph-theoretic approaches to injectivity and multiple equilibria in systems of interacting elements. Commun Math Sci 7(4):867–900

Banaji M, Pantea C (2016) Some results on injectivity and multistationarity in chemical reaction networks. SIAM J Appl Dyn Syst 15(2):807–869

Bernard C (1898) Introduction à l'étude de la médecine expérimentale. Librairie Joseph Gilbert, Paris

Cannon W (1926) Physiological regulation of normal states: some tentative postulates concerning biological homeostatics, Ses Amis, ses Colleges, ses Eleves

Craciun G (2015) Toric differential inclusions and a proof of the global attractor conjecture, arXiv:1501.02860

Craciun G (2019) Polynomial dynamical systems, reaction networks, and toric differential inclusions. SIAGA 3(1):87–106

Craciun G, Feinberg M (2005) Multiple equilibria in complex chemical reaction networks: I. The injectivity property. SIAM J Appl Math 65(5):1526–1546

Feinberg M (1979) Lectures on chemical reaction networks. University of Wisconsin, Notes of lectures given at the Mathematics Research Center, p 49

Feinberg M (2019) Foundations of chemical reaction network theory. Springer, Berlin

Feliu E, Wiuf C (2013) Variable elimination in post-translational modification reaction networks with mass-action kinetics. J Math Biol 66(1):281–310

Félix B, Shiu A, Woodstock Z (2016) Analyzing multistationarity in chemical reaction networks using the determinant optimization method. Appl Math Comput 287:60–73

Golubitsky Martin, Stewart Ian (2017) Homeostasis, singularities, and networks. J Math Biol 74(1–2):387–407

Golubitsky M, Stewart I (2018) Homeostasis with multiple inputs. SIAM J Appl Dyn Syst 17(2):1816–1832

Golubitsky M, Wang Y (2020) Infinitesimal homeostasis in three-node input-output networks. J Math Biol 80(4):1163–1185

Golubitsky M, Stewart I, Antoneli F, Huang Z, Wang Y (2020) Input-output networks, singularity theory, and homeostasis. In: Proceedings of the workshop on dynamics, optimization and computation held in honor of the 60th birthday of Michael Dellnitz, Springer, pp 31–65

Guldberg C, Waage P (1864) Studies concerning affinity. CM Forhandlinger: Videnskabs-Selskabet I Christiana 35(1864):1864

Gunawardena J (2003) Chemical reaction network theory for in-silico biologists, Notes available for download at http://vcp.med.harvard.edu/papers/crnt.pdf

Hassan K (2002) Nonlinear systems. Michigan State University, East Lansing

Joshi B, Shiu A (2015) A survey of methods for deciding whether a reaction network is multistationary. Math Model Nat Phenom 10(5):47–67

Ma W, Trusina A, El-Samad H, Lim W, Tang C (2009) Defining network topologies that can achieve biochemical adaptation. Cell 138(4):760–773

Nijhout F, Reed M (2014) Homeostasis and dynamic stability of the phenotype link robustness and plasticity. Integr Comp Biol 54(2):264–275

Nijhout F, Reed M, Budu P, Ulrich C (2004) A mathematical model of the folate cycle new insights into folate homeostasis. J Biol Chem 279(53):55008–55016

Nijhout H, Best J, Reed M (2014) Escape from homeostasis. Math Biosci 257:104–110

Perez Millan M, Dickenstein A (2018) The structure of messi biological systems. SIAM J Appl Dyn Syst 17(2):1650–1682

Pérez Millán M, Dickenstein A, Shiu A, Conradi C (2012) Chemical reaction systems with toric steady states. Bull Math Biol 74(5):1027–1065

Reed M, Best J, Golubitsky M, Stewart I, Nijhout H (2017) Analysis of homeostatic mechanisms in biochemical networks. Bull Math Biol 79(11):2534–2557

Shinar G, Feinberg M (2010) Structural sources of robustness in biochemical reaction networks. Sci 327(5971):1389–1391

Siegel D, Johnston M (2008) Linearization of complex balanced chemical reaction systems, Preprint

Tang Z, McMillen D (2016) Design principles for the analysis and construction of robustly homeostatic biological networks. J Theor Biol 408:274–289

Thomson M, Gunawardena J (2009) The rational parameterisation theorem for multisite post-translational modification systems. J Theor Biol 261(4):626–636

Voit E, Martens H, Omholt S (2015) 150 years of the mass action law. PLOS Comput Biol 11(1):e100401
Wang Y, Huang Z, Antoneli F, Golubitsky M (2020) The structure of infinitesimal homeostasis in input-output networks, arXiv:2007.05348
Yu P, Craciun G (2018) Mathematical Analysis of Chemical Reaction Systems. Isr J Chem 58(6–7):733–741
Yu P, Craciun G, Mincheva M, Pantea C (2022) A graph-theoretic condition for delay stability of reaction systems. SIAM J Appl Dyn Syst 21(2):1092–1118

Publisher's Note Springer Nature remains neutral with regard to jurisdictional claims in published maps and institutional affiliations.

Springer Nature or its licensor (e.g. a society or other partner) holds exclusive rights to this article under a publishing agreement with the author(s) or other rightsholder(s); author self-archiving of the accepted manuscript version of this article is solely governed by the terms of such publishing agreement and applicable law.