Journal of Mechanical Science and Technology (KSME Int. J.), Vol. 19, No. 8, pp. 1597~1610, 2005 1597

Diagnosing the Cause of Operational Faults in Machine Tools with an Open Architecture CNC

Dong Hoon Kim*
Intelligent Machins Systems Research Center, Korea Institute of Machinery & Materials (KIMM), Daejeon 305-343, Korea
Sun Ho Kim
Department of Mechatronics Engineering, Dong-Eui University, Pusan 614-714, Korea
Jun-Yeob Song
Intelligent Machine Systems Research Center, KIMM, Daejeon 305-343, Korea

The conventional computerized numerical controller (CNC) of machine tools has been increasingly replaced by a PC-based open architecture CNC (OAC) that is independent of a CNC vendor. The OAC and machine tools with an OAC have led to a convenient environment in which user-defined applications can be efficiently implemented within a CNC. This paper proposes a method of diagnosing the cause of operational faults. The method is based on the status of a programmable logic controller in machine tools with an OAC. An operational fault is defined as a disability that occurs during the normal operation of machine tools. Operational faults constitute more than 70 percent of all faults and are also unpredictable because most of them occur without any warning. To quickly and correctly diagnose the cause of an operational fault, two diagnostic models are proposed : the switching function and the step switching function. The cause of the fault is logically diagnosed through a fault diagnosis system using diagnostic models. A suitable interface environment between a CNC and developed application modules is constructed to implement the diagnostic functions in the CNC domain. The results of the diagnosis were displayed on a CNC monitor for machine operators and transmitted to a remote site through a Web browser. The proposed diagnostic method and its results were useful to unskilled machine operators and reduced the machine downtime.

Key Words : Open Architecture CNC, Diagnosing Causes, Operational Faults, Machine Tools, Diagnostic Models

1. Introduction

The industrial demand for open architecture manufacturing systems and the requirement for a high quality computerized numerical controller (CNC) have motivated active research into an open architecture controller (Rober and Shin, 1995 ; Wright, 1995). As a result of the research, a PC-based open architecture CNC (OAC) has been introduced. Recently, machine tools with an OAC have been increasing because of the software makes them portable and expandable. These machine tools support the development environment that allows user-defined applications such as real-time monitoring and control to be implemented in the CNC domain (Kim et al., 2001 ;

* Corresponding Author,
E-mail : kdh680@kimm.re.kr
TEL : +82-42-868-7148; **FAX** : +82-42-868-7150
Intelligent Machins Systems Research Center, Korea Institute of Machinery & Materials (KIMM), Daejeon 305-343, Korea. (Manuscript **Received** December 30, 2004; **Revised** July 12, 2004)

Kim et al., 2000 ; Lee et al., 2004 ; Tahk and Shin, 2002). Studies related to the monitoring and control of machine tools with an OAC have focused on the following : monitoring and controlling the machine status of each axis by interrupting signals between the OAC and electric actuators (Rober and Shin, 1995) ; real-time control of machine tools with an OAC through a digital signal processing board which is connected to sensors installed in an CNC (Erol et al., 2000 ; Kim et al., 2005) ; the integration of process monitoring and the optimized interpolation of each axis in machine tools with an OAC (Yellowley and Pottier, 1994) ; the economic system configurations of machine tools with an OAC by a servo control using a field programmable gate array (Oldknow and Yellowley, 2001).

Recently, the research directions for machine tools with an OAC have been expanded from conventional research categories such as control and monitoring to research on the reliability and maintainability of machine tools. Studies on the diagnosis of machine faults and on the analysis of machine conditions that affect machining are vital for the productivity and reliability of machine tools. These studies have focused on the following : a ladder diagram analysis tool for machine tools sequentially controlled by a programmable logic controller (PLC) (Kim et al., 2001) ; a study on remote diagnosis of machine troubles by using a commercial expert system (Kang and Kang, 1999) ; analysis of the troubling influence factors for maintaining gas turbines based on a PLC (Guasch et al., 2000) ; the diagnosis and analysis systems of a flexible modular manufacturing system for maintenance planning (Hu et al., 2000) ; monitoring and diagnosis systems for integrated information management of a modern manufacturing system (Zhou et al., 2000) ; analysis and diagnosis of condition parameters related to machine faults in a textile plant (Hu et al., 1999).

Researches on the diagnosis and analysis of machine tools with an OAC fall into two categories. The first category pertains to system modeling. It focuses on the study of structural analysis and diagnosis of factors likely to affect machine faults from the design stage to the manufacturing process. The second category pertains to the machine shop-floor. It focuses on the study of functional analysis and diagnosis of the condition parameters of the machine and its components. In a recent study, structural analysis has been used to diagnose the key factors that affect machine faults from the system design stage (Rao and Gandhi, 2002). Another study introduced the analysis and diagnosis of machine conditions such as vibration, temperature, and the power consumption of the machine and its components (Hu et al., 2001).

In real shop-floor, however, the structural causes or the condition parameters of machine tools rarely cause a fault. Rather, during normal operation, operational faults resulting from troublesome sensors and machine components occur most often (Hu et al., 1999). In such cases, the CNC does not provide detailed information of the causes of the fault. According to maintenance reports, only about 20 percent of downtime is spent on maintenance work, whereas, about 80 percent is spent on searching for the causes of the fault (Hu et al., 1999 ; Turbotek, 2001). Searching time for the causes of fault signals that are assigned to user's individual addresses of PLC is more required.

The types of faults that occur in machine tools are classified into two categories : faults resulting from continuous degradation of performance due to the aging of components ; and disability faults that are likely caused by factors such as manipulation errors or problems with sensors and components. Machine operators pay more attention to the second category because such faults often occur suddenly without warning (Kim et al., 2001). In this paper, the disability condition of machine tools is defined as an operational fault. When an operational fault occurs, an unskilled operator that does not understand the PLC structure wastes considerable time searching for the cause of the fault. Because the sequence of controlling and operating a CNC machine tool is based on a PLC, a PLC ladder diagram must first be analyzed in order to check the relations of the input and output signals associated with the fault (Kim et al., 2001 ; Hu et al., 1999). Although an expert system as well as a neural network system

has been used for diagnosing of machine tools faults (Hu et al., 2001), these systems can impair the CNC performance with respect to the operational efficiency of machine tools.

The diagnostic logic for the fault cause must therefore be implemented without impairing the CNC performance, and without requiring additional installation or loading of infra software. Moreover, notification of the cause of the fault must be given quickly to reduce the recovery time and to improve the efficiency of the CNC machine tools. Recently, because of the growth of the Internet, the demand has increased for gathering information on faults and their causes by remote site. Although a multi-agent concept was recently introduced along with a number of related studies, these studies are mostly theoretical ; they use a conceptual approach for standard message specification (Kim et al., 2000 ; Ong et al., 2001). The use of a multi-agent framework in an OAC, for example the intelligent physical agent open-source framework or the java agent development framework, has a high possibility of negatively influencing the efficiency and productivity of a machine due to the loss of computing power and memory. Hence, to support remote services of diagnosed results, the interface daemon that communicates with an external server must be programmed and used in an OAC instead of a complicated application such as a multi agent system (Ong et al., 2001).

This study tried to improve the method of diagnosing the cause of operational faults in machine tools. Diagnosing the cause of faults with CNC diagnosis functions has been difficult because most operations of the actuators, sensors and input/output devices are sequentially controlled by a PLC. Hence, a diagnostic method is proposed for identifying operational faults and detecting their causes. The method uses diagnostic models based on PLC information. The proposed techniques are implemented in an OAC. The interesting faults are the operational disability faults such as an emergency stop disability, a cycle start disability and a machine ready disability which comprise more than 70 percent of all faults. They are unpredictable because they occur without warning. Two diagnostic models, the switching function (SF) and the step switching function (SSF), are proposed because they correctly and efficiently diagnose the causes of the operational faults. When an operational fault occurs, the cause of the fault is logically diagnosed through these models. To apply these diagnostic models to an OAC, a suitable interface environment was constructed between a CNC and developed application modules. The results of the diagnosis are provided to machine operators through a CNC monitor and transmitted to clients through a Web browser.

2. Structure of an OAC in Machine Tools

An OAC has the functional structure shown in Fig. 1. A numerical controller kernel, a man machine interface, a CNC, and a PLC have the same functions as a conventional numerical controller. The OAC, however, is characterized by a flexible structure in which user-defined applications can be used within a CNC domain. To diagnose the cause of a fault and for remote monitoring of the results of the diagnosis, these basic functions need two additional functions : a fault diagnosis system (FDS) and a remote service system (RSS). The FDS, which is used within the OAC, can search for the cause of a fault when a fault occurs. For remote services, the RSS enables a communication with an external system. Such

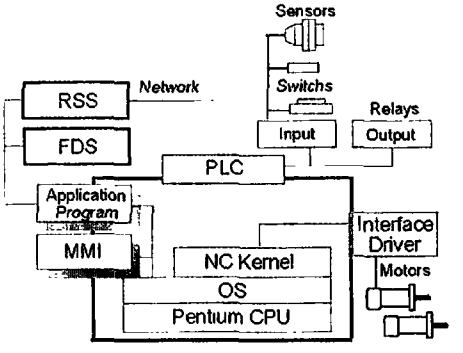

RSS : Remote Service System
FDS : Fault Diagnosis System

Fig. 1 Functional structure of an OAC in machine tools

communication enables the results of the diagnosis and the current status of the machine tools to be transmitted to a remote site. The major reasons for using the dual architecture of the FDS and the RSS are to reduce communication problems and to support real-time diagnosis. For instance, if the FDS is executed on an external network, the network problems can be generated by unstable communication sessions and network congestion. Because of these problems, the FDS must remain connected with an OAC domain. The continuous connection enables the data required for diagnosing the cause of the fault, such as the input and output signals of a PLC, to be acquired in real-time.

3. Diagnostic Models for the FDS

This section describes the identification of an operational fault, and the use of the FDS and diagnostic models in searching for the cause of the fault.

3.1. Definition of an operational fault

As mentioned, the disabilities of machine tools sequentially controlled by a CNC and a PLC are regarded as operational faults in this study. They are divided into the following three classes:

(1) Emergency stop error (ESE): a sudden stop during operation

(2) Cycle start disability (CSD): failure to start

(3) Machine ready disability (MRD): the non-ready state in a machine condition.

3.2. The FDS for detecting the cause of an operational fault

The FDS is a developed program that searches for the cause of a fault when an operational fault occurs. The diagnosis of faults in machine tools sequentially controlled by a PLC and a CNC is generally based on a PLC ladder diagram (Kim et al., 2001 ; Hu et al., 1999). This phenomenon explains why most data processing is executed within a PLC even though the fault occurs in a CNC or machine tools

Figure 2 shows an example of a PLC ladder diagram. This figure shows that a PLC ladder diagram is difficult to analyze because the PLC program expresses the complicated logical relations of all input/output signals. In addition, the step structure of a PLC retards the search for the cause of a program fault. In general, the recently developed CNC operating system supports a diagnostic function for some operational faults. However, the function supported by a CNC is limited to the partial faults that result from the unique PLC addresses initially assigned by a CNC vendor. It is very difficult to diagnose the faults that result from individual PLC addresses that have been optionally assigned by machine operators in the field as shown in Fig. 3. In this

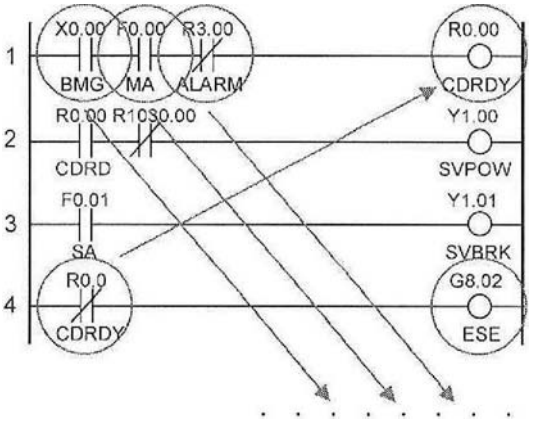

Fig. 2 A PLC ladder diagram of an ESE (G8.02)

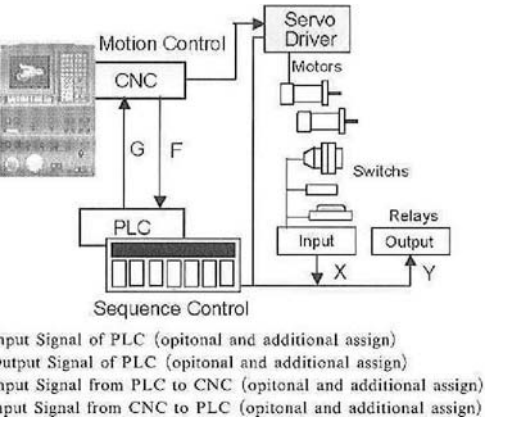

Fig. 3 Signal information related with PLC and CNC

case, the alarm for a machine disability state such as an ESE, a CSD or an MRD is indicated without detail information such as the cause signal of the fault or a prescription for maintenance work. An FDS is therefore required to overcome this problem and, through a logical mechanism, to quickly and correctly search for the cause of an occurring fault. For accurate diagnosis of the cause of a fault, the SF and the SSF diagnostic models are proposed and applied to the FDS. The two models enable the relationship of the input and output signals between a PLC and a CNC to be expressed.

3.3 Diagnostic models

3.3.1 The SF model

To diagnose the cause of an operational fault in machine tools, the condition of the fault occurrence should be first expressed in a logical model. As a static diagnostic model for diagnosing the cause of a fault, the SF model has many cases to satisfy the condition of fault occurrence. The condition to be correspondent to a complete operational action (output) of a PLC is logically expressed in Eq. (1) as follows:

$$c(t_s)=c_1(t_s)\circ c_2(t_s)\circ c_3(t_s)\cdots=\prod_i c_i(t_s) \quad (j=1, 2, \cdots, n) \tag{1}$$

Where $C(t_s)$ is the combination of all the conditions of a n-th step and the n-th step is the last step. In Eq. (1), 'o' means the sequence logic with 'AND', 'OR' and 'NOT'. The term $C(t_s)$ is defined as an SF. The SF is a static model in which '$C(t_s)=0$' or '$C(t_s)=1$' because it expresses the relationship between input and output signals for the satisfied condition of the fault occurrence only when the ladder diagram information is changed.

3.3.2 The SSF model

The SSF model is a dynamic model that searches for the cause step of a fault by gradually expressing the conditions that need to be satisfied for a fault occurrence. For $C(t_s)$ to be true in Eq. (1), $C_1(t_s)$, $C_2(t_s)$, $C_3(t_s)\cdots$ should be sequentially satisfied. Here, $C_j(t_s)$, the condition to be satisfied in each step, can be expressed as $C_j(t_k)$ in dynamic time domain. Here, t_k is the dynamic time from monitoring time of a fault occurrence to the detection time of the fault cause. In Eq. (2), $C_j(t_k)$ is defined as an SSF. As a model that searches for the cause step directly associated with a fault among the each step, the SSF model is a dynamic model in which 'IF $C_1(t_k)=1$ then $C_2(t_k)$ start Condition'.

$$c(t_d)=\prod_j c_j(t_k) \quad \begin{matrix}(j=1, 2, \cdots, n)\\(k=1, 2, \cdots, m)\end{matrix} \tag{2}$$

To complete one operational action of a PLC, many input and output signals of the PLC are generally interconnected by 'OR' and 'AND' logic. An FDS uses diagnostic models that express all the logical relationships between the input and output signals of a PLC. The FDS generates these diagnostic models through the four stages shown in Fig. 4(a) to Fig. 4(d). First, the binary code of a PLC ladder diagram can be converted to an instruction list (IL) (Turbotek, 2001). An instruction is generally composed of 6 bytes of the binary code as shown in Fig. 4(a). Second, the SF list is generated by interpreting the IL as shown in Fig. 4(b). For example, the string 'RDN R0.00 WR G8.02' is converted to 'G8.02=−R0.00'. This conversion explains why 'RD' means 'reading operation command', 'N' means 'inverse sign', 'R0.00' means a PLC relay signal, 'G8.02' means a PLC output signal and 'WR' means a 'write to variable command'. Here, 'R0.00' is again replaced by the connected sub signals shown in Fig. 2. Third, a specific SF that presents the condition of a specific PLC output signal such as an ESE (G8.02), a CSD (G9.00) and an MRD (Y1.00) is extracted from the SF list as shown in Fig. 4(c). Fourth, as shown in Fig. 4(d), the SF equation is divided into many SSFs by the parentheses symbol.

As mentioned, the FDS creates two logical models: the SF model and the SSF model. The SF model of the ESE (G8.02, a PLC output signal) shown in Fig. 2 is mathematically expressed in Eq. (3) as follows:

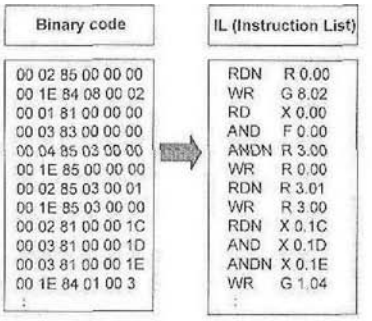

(a) Binary code to IL

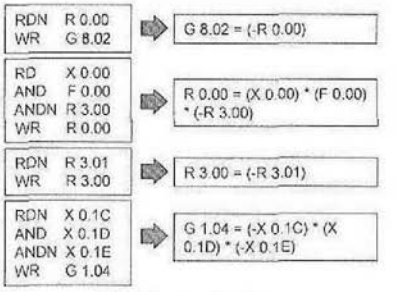

(b) IL to SF list

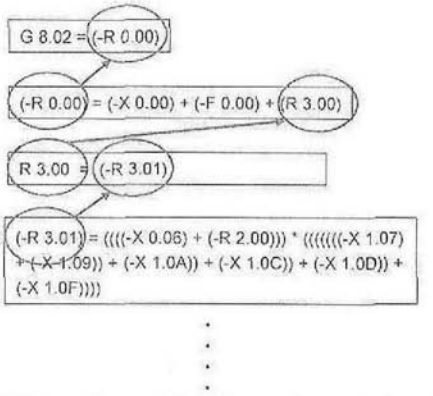

(c) SF list to the specific SF equation called an ESE (G8.02)

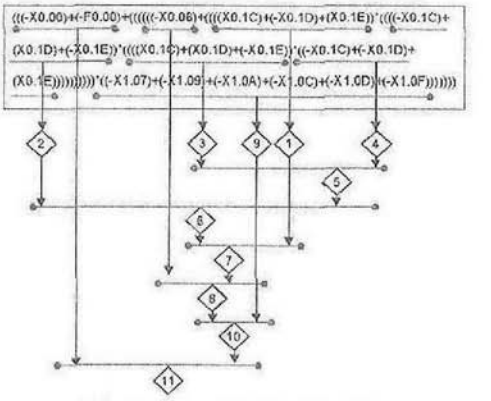

(d) Dividing SF into 11 SSFs

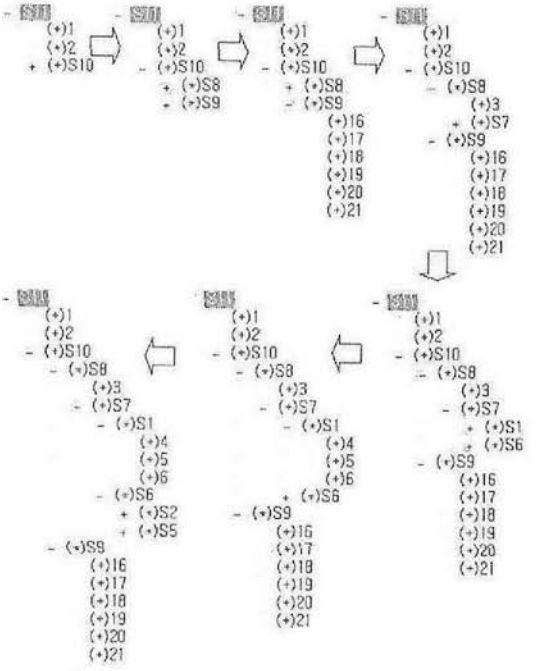

(e) Hierarchical structure of SSF-tree

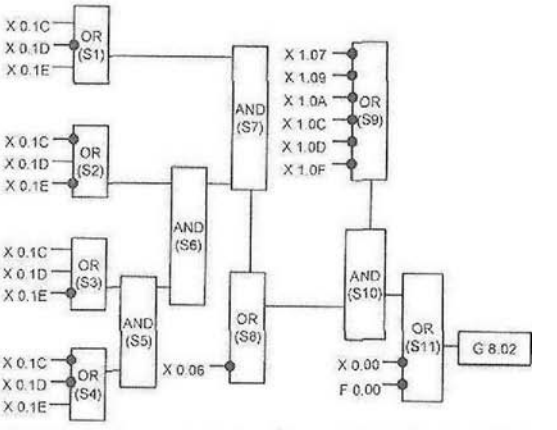

(f) Block diagram of SF (ESE: G8.02) and SSFs (S1, ···, S11)

Fig. 4 SF model and SSF model of an ESE (G8.02)

$$
\begin{aligned}
&SF(ESE: G8.02) = \\
&(((-X0.00)+(-F0.00)+((((((-X0.06)+((((X0.1C) \\
&+(-X0.1D)+(X0.1E))*((((-X0.1C)+(X0.1D) \\
&+(-X0.1E))*((((X0.1C)+(X0.1D)+(-X0.1E)) \qquad (3) \\
&*((-X0.1C)+(-X0.1D)+(X0.1E)))))))))) \\
&*((-X1.07)+(-X1.09)+(-X1.0A)+(-X1.0C) \\
&+(-X1.0D)+(-X1.0F))))))
\end{aligned}
$$

Where, '+' means 'OR logic', '*' means 'AND logic' and '−' means 'NOT logic'. Many signals are connected by 'OR' and 'AND' in the SF equation. From this SF equation, many SSFs were generated. The results shown in Fig. 4(d) were obtained by using the parentheses to divide the SF equation into 11 SSFs. These 11 SSFs are internally connected by 'OR' or 'AND' logic in many levels, as shown in Fig. 4(e). To briefly express the complicated SF equation in the form of a tree, each SSF is expressed by the symbol 'S' and its index. Each unit signal that belongs to each SSF is expressed as a number such as '1', '2', '3' ···, '21'. The each unit signal was defined in the signal description file as shown in Table 1. Therefore, the SF (ESE) of Eq. (2) is briefly expressed as S11. Here, S11 has S10 and two unit signals called '1' and '2'. The two unit signals are directly connected to S11. In addition, S10 has nine low-ranking SSFs from S9 to S1. Similarly, each SSF has another sub-SSF or several signals. The SF and the SSFs of the ESE (G8.02) are shown in the form of a block diagram in Fig. 4 (f). This figure shows that the displayed signals in the block diagram can be candidate for the specific cause signal of the ESE occurrence because they are associated with the condition of the ESE occurrence.

Table 1 Description of signals related with ESE (G8.02)

NUMBER	PLC Signal (ADDRESS)	DESCRIPTION
1	−X0.00	E-STOP PUSH BUTTON NEGATIVE
2	−F0.00	NC READY NEGATIVE
3	−X0.06	PBOTC NEGATIVE
4	X0.1C	LIMIT SWITCH OF X AXIS
5	−X0.1D	MODE SW AUTO NEGATIVE
6	X0.1E	LIMIT SWITCH OF Z AXIS
7	−X0.1C	LIMIT SW. OF X AXIS NEGATIVE
8	X0.1D	MODE SW. JOG_AUT_MDI
9	−X0.1E	LIMIT SW. OF Z AXIS NEGATIVE
10	X0.1C	LIMIT SWITCH OF X AXIS
11	X0.1D	LIMIT SWITCH OF Y AXIS
12	−X0.1E	LIMIT SW. OF Z AXIS NEGAIVE
13	−X0.1C	LIMIT SW. OF X AXIS NEGAIVE
14	−X0.1D	LIMIT SW. OF Y AXIS NEGAIVE
15	X0.1E	LIMIT SWITCH OF Z AXIS
16	−X1.07	PXOT NEGATIVE
17	−X1.09	MXOT NEGATIVE
18	−X1.0A	PYOT NEGATIVE
19	−X1.0C	MYOT NEGATIVE
20	−X1.0D	PZOT NEGATIVE
21	−X1.0F	MZOT NEGATIVE

4. Implementation of FDS and Diagnostic Results

This section describes an interface environment for applying FDS functions to a CNC domain, a diagnostic procedure for detecting the cause of a fault, and the results of the diagnosis.

4.1 Interface between a CNC domain and the FDS

To implement FDS functions using diagnostic models to a CNC domain, the environment for those implementation uses a method of sharing the CNC-embedded memory with the input and output signals of the PLC. In addition, an alarm log file with the information on the CNC alarm is used. The environment is designed as a single platform type that can support the real-time access to CNC information in a PC-based OAC. The configuration for interfacing data between the FDS and the CNC domain is shown schematically in Fig. 5. The real-time kernel (RTX) that CNC vendors generally include in an OAC was used to overcome the problem of the speed depreciation that results from accessing many signal values between the PLC and the CNC. It was also used to execute real-time data processing.

The signal map data of the PLC and the alarm log data of the CNC are accessed by using the

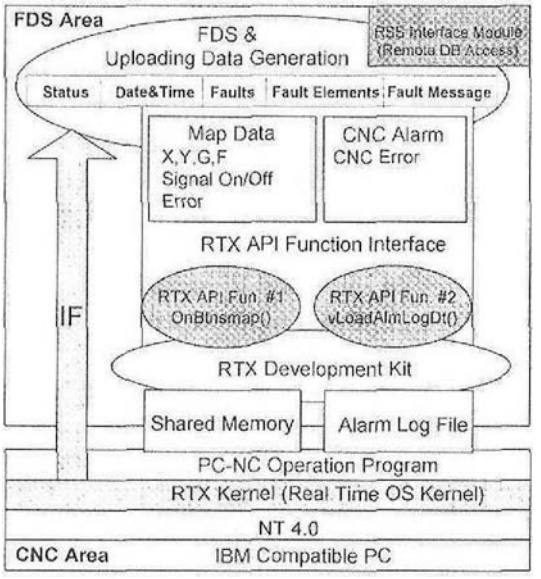

Fig. 5 Interface between a CNC domain and a FDS

application programming interface (API) functions of the RTX. The interface method quickly checks the map data, such as X, Y, G, F, and the on/off information of each signal. These data items refer to the information exchanged between the CNC and the PLC: X is the input signal, and Y is the output signal, of the PLC; G is the input signal from the PLC to the CNC, and F is the input signal from the CNC to the PLC. The internal CNC alarm information can also be checked. When an operational fault occurs, the checked data related to the fault signal is used as reference data for the true or false condition of the SF equation in the FDS.

4.2 Diagnostic procedure for detecting the cause of a fault

The diagnostic flow for detecting the cause of a fault by an FDS using diagnosis models is shown in Fig. 6. First, the all SF equations called SF list, which are mathematical models with a logical relationship between all input and output signals of the PLC, are automatically created by a developed application. Second, a specific SF equation that expresses the fault condition of a specific output signal is defined from the SF list. Many SSFs are then classified from the specific SF. These preprocesses can be omitted for a rapid

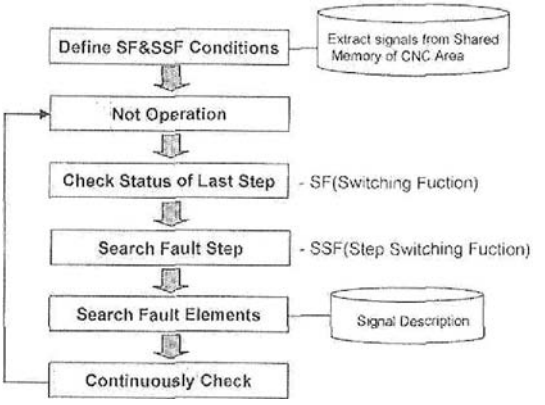

Fig. 6 Diagnostic flow for detecting the cause of a fault

diagnosis if the PLC ladder diagram is unchanged each time. Third, if the highest step (for instance, S11 in Fig. 4(f)) is assumed to be the last step of the fault condition, the last step is first checked to determine whether it can be a true condition of the fault occurrence. Next, if the last step cannot be a true condition of the fault occurrence, it is continuously processed in reverse, from the last step to the first step, to check whether the current step satisfies the requirements of a true condition until the correspondent step is found. Here, the found step is assumed to be a fault step. Finally, if such fault step is found, the cause signal of the specific fault is determined by comparing the values of the sub signals that belong to the detected fault step with the real values of the memory embedded in the CNC. The values of the sub signals are defined as the digit '0' or '1' by the plus or minus sign of each signal in the fault step. Each value is actually compared with the real value of each signal extracted from the CNC memory.

4.3 Example of diagnosing the cause of a fault

Figure 7 shows the operation of an FDS that is used within an OAC. The FDS reports the results of the backward search for the condition that satisfies the fault occurrence. Specifically, the results show that the reported X0.00 signal, which is assigned to an emergency stop button, is the cause signal of the occurring fault when an ESE

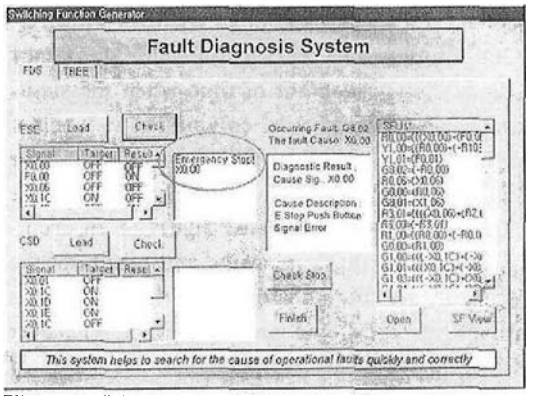

Fig. 7 FDS operations in an OAC

occurs.

The sequential procedure for diagnosing the cause of an ESE is as follows : the G8.02 (ESE) of Eq. (3), which is one of the PLC output signals, consists of many X signals which are the general input signals of the PLC and one F signal which is the input from the CNC to the PLC. Here, the real values of these signals are first extracted from the memory embedded in the CNC by the API functions ; the S11 shown in Fig. 4(f), which is the last step of the SF and also the highest SSF of all the SSFs, is evaluated to check whether the equation of S11 satisfied the true condition of the ESE occurrence ; in the evaluation, all the signal values of the S11 equation were compared with the real values of the memory embedded in the CNC.

In detail, the S11 is the last step and it is defined as '1+2+S10'. According to signal description file that has already been defined, '1' means the −X0.00 signal, '2' means the −F0.00 signal, and 'S10' means the next step as well as another SSF that is located in a lower level than S11. These 3 items, '1', '2' and 'S10', are related by the 'OR' condition. Two of the signals have minus signs meaning that they are based on 'NOT' logic. Therefore, if the real value of X0.00 or F0.00 which was extracted from the memory embedded in the CNC is zero, then either X0.00 or F0.00 can be satisfy the fault condition. Whichever one is zero, it is considered the cause signal of the ESE. However, if neither X0.00 nor F0.00 is zero, the search proceeds to the S10 level which is the next step below S11.

5. Remote Monitoring of Diagnostic Results

The key role of the RSS is to assist the maintenance works between the machine operator of the shop floor and the outside technical maintenance personnel of the CNC vendor or the machine tools builder.

5.1 Functional structure and role of the RSS

The RSS supports remote services such as the monitoring of the results of the diagnosis obtained from the FDS for clients including the outside technical maintenance personnel. As shown in Fig. 8, the RSS is composed of the RSS interface module (RSSI) that is used as an FDS internal function in the OAC, and a server-side script program that is used within the external server. The RSSI, which is an interface daemon module for communication, has the role of interfacing the data between the FDS and the RSS server by transmitting the results of the diagnosis from the FDS to the server. As shown in Fig. 9, the RSSI transmits to an external server the results of the diagnosis obtained from the FDS, along with key information such as the occurring faults and the cause signals. Used as an FDS internal function in the CNC domain, the RSSI module communicates between the FDS and the RSS server.

To connect to the database in the remote site, open database connectivity was used as a standardized method with an ActiveX data object. The data processing was executed with the structured query language which is the standard language for databases. The monitoring data and the results of the diagnosis are created as a structured table inside the database. For a Web-based application, a server-sided script program was used to execute real-time monitoring of the diagnostic results and current machine status. This monitoring service presents useful information such as the kind of a fault, the cause of the fault and the current status of the machine tool. These results are especially useful for the maintenance con-

ducted by the outside technical maintenance personnel in a remote site. In this way, the RSS has a role of servicing remote monitoring.

5.2 Remote monitoring of the results of the diagnosis

Clients such as outside technical maintenance personnel can receive the results of the diagnosis from FDS through a Web browser. The application of the monitoring service by the RSS is shown in Fig. 10. Five information columns are displayed: [Status], [Date & Time], [Faults], [Fault Elements] and [Fault Message]. The [Status] column shows the current status of the machine tools. It has three states: 'Normal', 'Fault' and 'Recovery'. The [Date & Time] column shows the point of time when the status was changed. The [Fault] column shows whether the fault was an ESE, a CSD or an MRD. The [Fault Elements] column shows the result of the diagnosis. It means the cause signal of an occurring fault. The machine status and results of the diagnosis are periodically provided to clients through an RSSI and an RSS server whenever associated information is updated. The updated current status of the machine tools is sequentially

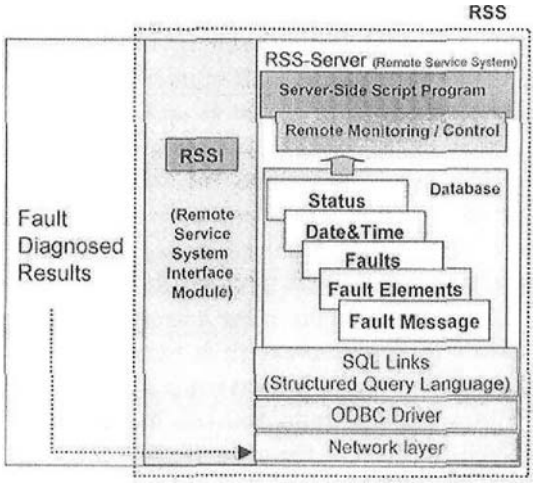

Fig. 8 Structure of a RSS

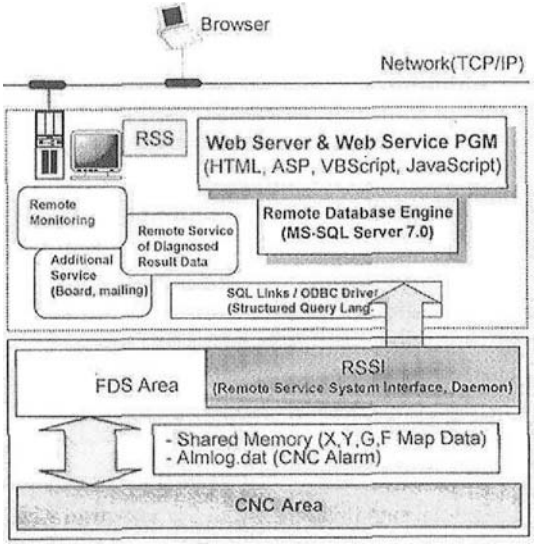

Fig. 9 Interface between the FDS and the RSS

Machine Code : M01PS0004

	Status	Date & Time	Faults	Fault Elements	Fault Message
	Normal	2002-08-06 18:46:11	None	None	No Fault
(6)	Recovery	2002-08-06 18:46:10	ESE	None	Recovery Done
(5)	Fault	2002-08-06, 18:46:09	ESE	X0.00	[EStop PB] Signal Error
(4)	Normal	2002-08-06 18:11:32	None	None	No Fault
	Recovery	2002-08-06 18:11:31	ESE	None	Recovery Done
	Fault	2002-08-06, 18:11:27	ESE	X0.00	[EStop PB] Signal Error
	Normal	2002-08-06, 18:11:26	None	None	No Fault
(3)	Recovery	2002-08-06, 18:10:46	CSD	None	Recovery Done
(2)	Fault	2002-08-06, 18:09:14	CSD	X0.10	[Jog Mode s/w] Signal Error
(1)	Normal	2002-08-06 15:22:05	None	None	No Fault
	Recovery	2002-08-06, 15:22:05	ESE	None	Recovery Done
	Fault	2002-08-06, 12:20:43	ESE	X0.00	[EStop PB] Signal Error
	Normal	2002-08-06 11:22:13	None	None	No Fault

Row 13 Data is listed

Fig. 10 Remote monitoring of the results of the diagnosis

displayed from the bottom to the top as shown in Fig. 10.

For example, if a 'CSD' occurs during normal operation, relevant information is sequentially displayed as follows: first, if no fault occurs at normal times, 'Normal' is displayed in the first row of the [Status] column, as shown in Fig. 10; however, if a fault occurs, the machine status changes from 'Normal' to 'Fault'; 'Fault' is then displayed in the [Status] column and relevant data such as the kind of the fault and the cause of the fault is also displayed in the second row. As shown in Fig. 10, the relevant data is presented as follows:

"Fault — 2002-08-06, 18 : 09 : 14 — CSD — X0.1D — Jog Mode S/W Signal Error"

Where, 'Fault' is the changed status of the machine tools, '2002-08-06, 18 : 09 : 14' is the point of time when the fault occurs, 'CSD' is the kind of operational fault, and X0.1D, one of the PLC input signals, is the diagnostic result of detecting the cause of the CSD. The diagnostic result means that the mode switch signal for operation in the CNC manipulation panel, which is assigned to the X0.1D defined in the description file of the PLC signal, is the cause of the CSD. For a corrective cycle start, the mode switch should be changed from jog mode to another operational mode such as the auto mode shown in Fig. 11. If the CSD fault is not cancelled even though the mode switch is changed to the auto mode, then another cause signal still exists. Through continuous experiment, another signal was confirmed as the second cause of the CSD. This signal was assigned to the −X1.0F signal with the comment 'Z axis is over travel limit (MZOT)'. This phenomenon means that either Z axis is located beyond the minus limit switch or the Z axis limit sensor is now in trouble.

An example of an ESE is shown in the fifth row of Fig. 10 as follows.

"Fault — 2002-08-06, 18 : 46 : 09 — ESE — X0.00 — E. Stop PB Signal Error"

Where, 'Fault' is the current status of the machine tools and '2002-08-06, 18 : 46 : 09' is the point of time when the fault occurs. 'ESE' is the kind of fault and X0.00 is the diagnostic result of the ESE. This result means that the button for the emergency stop, which was assigned to the X0.00 defined in the PLC signal description, is the cause of the ESE. For recovery, the pushed button for the emergency stop should be released. Besides these services, additional services are provided for machine operators of the field and outside technical maintenance personnel. The additional services include recovery directions in a sketch associated with the fault cause signal as shown in Fig. 11, and displaying video-streaming data

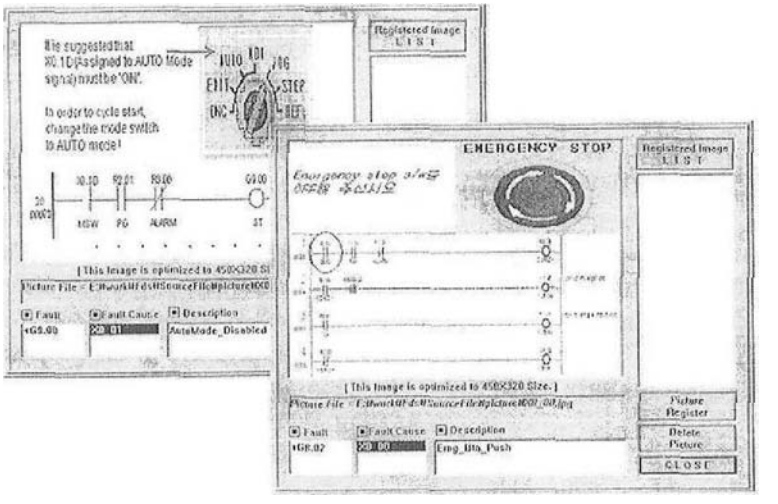

Fig. 11 Maintenance information associated with a fault cause signal

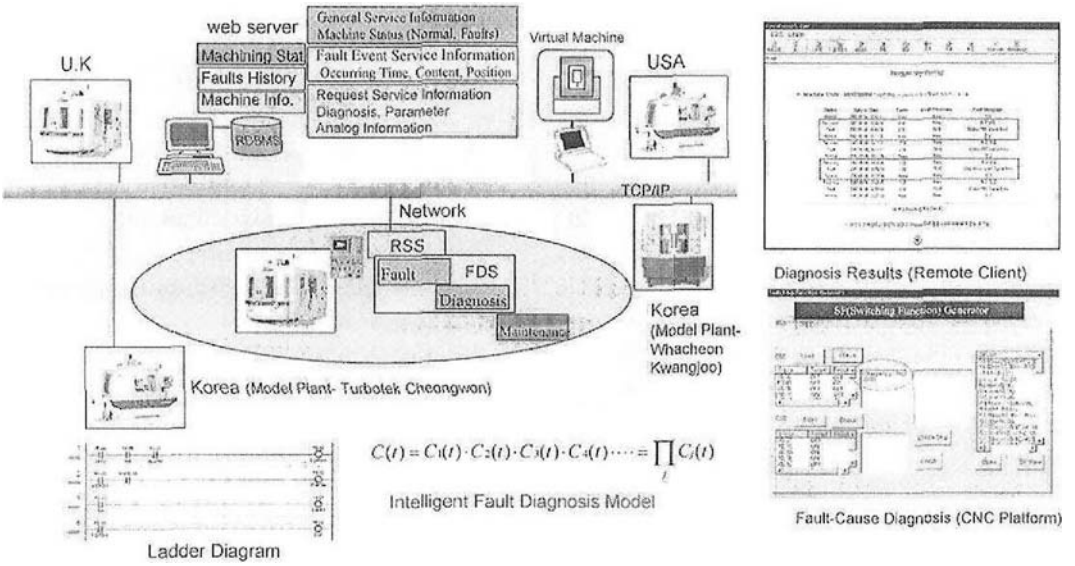

Fig. 12 Diagnosing and monitoring in model plants

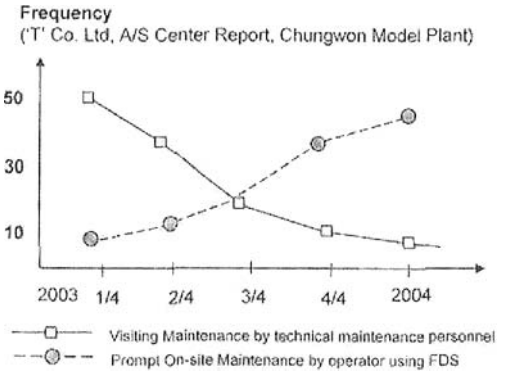

Fig. 13 Reduction of dependence on technical maintenance personnel

obtained from a web camera installed in the machine tools. To sum up, diagnosing by using proposed diagnostic models and remote monitoring of the diagnosed results have been performed in model plants as shown in Fig. 12. These functions were especially useful to inexperienced operators in the field and technical maintenance personnel of a remote site as shown in Fig. 13.

6. Conclusions

The troubles of CNC machine tools have CNC faults and operational faults. The operational faults occur unpredictably under all possible conditions including faults with components and sensors, and the manipulation errors of operators. For a CNC fault, the CNC generally provides a diagnostic function. For an operational fault, however, the CNC and the machine tool vendors have not suitable methods due to various kinds of machine tools and its application environment. Hence, when an operational fault, being a cause of disabling the machine operation, occurs, the technical maintenance personnel generally visit the field to diagnose the cause of the fault. That method requires a considerable loss of time and cost.

To improve the method of searching for a fault, a new technique is proposed for diagnosing the causes of operational faults in machine tools with an OAC. To detect the cause of a fault, diagnostic models based on PLC ladder information were applied. The results of the diagnosis are displayed on a CNC monitor for machine operators; the results can also be viewed at a remote site through a Web browser. The operational experiment of the proposed technique has been performed for more than a year at the time of writing in a specially constructed test machine. The test machine is a multi-axes milling machine with an OAC; it is based at a CNC machine tools plant at Cheongwon (Turbotek), South Korea.

The method quickly and correctly shows the causes of occurring faults in CNC machine tools. The results of this study are summarized as follows:

(1) The SF and the SSF models were used to diagnose the cause of an operational fault. The SF model logically expresses the conditions of the fault occurrence, whereas the SSF model searches for the cause step of the fault occurrence. Both models are based on the status information of the PLC and they are working in the FDS.

(2) The FDS was implemented in the CNC domain to diagnose the cause of the fault. The FDS uses a method of sharing memory with information on the PLC signals, and sharing the alarm log files with information on the CNC alarm.

(3) The kinds of faults, the cause signals of faults and the recovery directions were provided to machine operators through a CNC monitor. With the aid of an interface module of an RSSI, clients could view this information through a Web browser.

The proposed diagnostic method and its results were useful to unskilled machine operators and reduced the machine downtime. Prompt and reliable maintenance work was on-site realized independently of the experience of maintenance experts. The direct benefits of this research can be described as follows:

(1) Improved availability of machine tools; the time wasted in searching for the cause of operational faults were reduced by approximately 80 percent according to the average of experimental results for over a year.

(2) Reduced dependence on technical maintenance personnel; the FDS quickly and correctly diagnosed the cause of faults.

(3) Access to remote management; web services enabled the diagnostic results and machine status to be viewed from a remote site.

The FDS can be directly applied to other machines that have an open architecture controllers and the same series PLC suitable to IEC1131 (which is the PLC industry standard). The aims of future work are to diversify the user interface of the FDS, to statistically predict the cause of faults, and to prevent faults from occurring.

Acknowledgments

This work was supported by the National Research Laboratory Program of the Korean Ministry of Science and Technology (MOST).

References

Erol, N. A., Altintas, Y. and Ito, M. R., 2000, "Open System Architecture Modular Tool Kit for Motion and Machining Process Control," *IEEE/ASME Transactions on Mechatronics*, Vol. 5, No. 3, pp. 281~291.

Guasch, A., Quevedo, J. and Milne, R., 2000, "Fault Diagnosis for Gas Turbines Based on the Control System Engineering," *Application of Artificial Intelligence*, Vol. 13, pp. 477~484.

Hu, W., Starr, A. G. and Leung, A. Y. T., 1999, "Two Diagnostic Models for Plc Controlled Flexible Manufacturing Systems," *International Journal of Machine Tools & Manufacture*, Vol. 39, pp. 1979~1991.

Hu, W., Starr, A. G., Zhou, Z. and Leung, A. Y. T., 2000, "A systematic Approach to Integrated Fault Diagnosis of Flexible Manufacturing Systems," *International Journal of Machine Tools & Manufacture*, Vol. 40, pp. 1587~1602.

Hu, W., Starr, A. G., Zhou, Z. and Leung, A., 2001, "An Intelligent Integrated System Scheme for Machine Tool Diagnostics," *International Journal of Advanced Manufacturing Technology*, Vol. 18, pp. 836~841.

Kim, D. H., Kim, S. H., Koh, K. S., 2005, "A Scheme for an Internet-based Checking Method of Machine-Tools with Variant CNC Architecture," *Journal of Mechanical Science and Technology*, Vol. 19, No. 1, pp. 97~105.

Kim, S. H., Kim, D. H., Kim, D. Y., Han, G. S. and Kim, J. H., 2001, "LAT System for Fault Tree Generation," *Proceedings of the KSPE Autumn Conference*, pp. 442~445.

Kim, S. H., Kim, D. H. and Park, K. T., 2000, "Open Manufacturing System Using MMS

Service and Object Oriented Manufacturing Devices," *Journal of KSPE*, Vol. 17, No. 10, pp. 41~48.

Kang, D. C. and Kang, M. J., 1999, "A Study on an Internet-based Remote Diagnosis System for Machine-tool Failures," *Journal of KSPE*, Vol. 16, No. 9, pp. 75~81.

Lee, D. J., Kim, S. H. and Ahn, J. H., 2004, "Breakage Detection of Small-Diameter Tap Using Vision System in High-Speed Tapping Machine with Open Architecture Controller," *KSME International Journal*, Vol. 18, No. 7, pp. 1055~1061.

Oldknow, K. D. and Yellowley, I., 2001, "Design, Implementation and Validation of a System for the Dynamic Reconfiguration of Open Architecture Machine Tool Controls," *International Journal of Machine Tools & Manufacture*, Vol. 41, pp. 795~808.

Ong, S. K., An, N. and Nee, A. Y. C., 2001, "Web-based Fault Diagnostic and Learning System," *International Journal of Advanced Manufacturing Technology*, Vol. 18, pp. 502~511.

Rao, R. V. and Gandhi, O. P., 2002, "Failure Cause Analysis of Machine Tools Using Digraph and Matrix Methods," *International Journal of Machine Tools & Manufacture*, Vol. 42, pp. 521~528.

Rober, S. J. and Shin, Y. C., 1995, "Modeling and Control of CNC Machines Using a PC-based Open Architecture Controller," *Mechatronics*, Vol. 5, No. 4, pp. 401~420.

Tahk, K. M., Shin, K. H., 2002, "A Study on the Fault Diagnosis of Roller-Shape Using Frequency Analysis of Tension Signals and Artificial Neural Networks Based Approach in a Web Transport System," *KSME International Journal*, Vol. 16, No. 12, pp. 1604~1612.

TurboTek, 2001, Operating Manual for Turbo HX-M.

Wright, P. K., 1995, "Principles of Open-architecture Manufacturing. Journal of Manufacturing Systems," Vol. 14, No. 3, pp. 187~202.

Yellowley, I. and Pottier, P. R., 1994, "The Integration of Process and Geometry Within an Open Architecture Machine Tool Controller," *International Journal of Machine Tools & Manufacture*, Vol. 34, No. 2, pp. 277~293.

Zhou, Z. D., Chen, Y. P., Fuh, J. Y. H. and Nee, A. Y. C., 2000, "Integrated Condition Monitoring and Diagnosis for Modern Manufacturing Systems," *Annals of the CIRP*, Vol. 49, pp. 387~390.