Int J Adv Manuf Technol (1995) 10:330–341
© 1995 Springer-Verlag London Limited

The International Journal of
Advanced
Manufacturing
Technology

Experimental Investigation of the Performance of a Reconfigurable Fixturing System

Bijan Shirinzadeh* and Yong Tie†

*Monash University, Department of Mechanical Engineering, Clayton, Melbourne, Victoria, Australia, and †CSIRO Division of Manufacturing Technology, Lindfield, Sydney, NSW, Australia

A reconfigurable fixturing system has been developed for computer-integrated assembly environments. The fixturing system employs a number of fixture modules that are set-up, adjusted and changed automatically by the assembly robot without human intervention. A commercially available computer-aided design (CAD) package with the help of a dedicated software program is used for the design, analysis, and verification of the fixture layout. The robot program for setting-up, adjusting, and dismantling the designed fixture is generated automatically. This paper presents and discusses the accuracy of such a reconfigurable fixturing system in view of the off-line programming techniques. The experimental techniques to measure the accuracy and repeatability for setting-up the fixture are presented. The measured results of the robot positioning various types of locating fixture modules are presented and compared with the intended position settings. From the comparison, the accuracy that is to be expected from such an approach to fixturing and measures for improvement are discussed. The cycle times involved in setting-up the fixture modules are also presented and analysed. These results provide an initial guide for manufacturing industries interested in employing such systems in their computer-integrated assembly environment.

Keywords: Computer-integrated manufacture; Fixture calibration; Flexible fixturing performance; Reconfigurable fixturing; Robotic assembly; Task planning and off-line programming

1. Introduction

Workpiece positioning and constraining is an important factor in manufacturing processes such as assembly, welding, and machining. Fixtures are employed to locate and hold the workpiece in position and to ensure that the dimensional accuracy is maintained during the manufacturing operation. Traditionally, fixtures have been designed and manufactured as single-purpose devices for specific parts and manufacturing operations [1,2]. The traditional approach is costly owing to the long lead time and effort required to design and manufacture special-purpose fixtures, manual set-up, and change of multiplicity of fixtures [3]. These factors have motivated researchers to develop software and hardware for automating fixture design and set-up [4]. However, research in automated fixturing systems has generally been limited to the early stages of fixture design and the automated design of modular fixtures using knowledge-based approaches [5–14]. There has been very little focus on the design of hardware, and specifically practical issues such as dimensional accuracy and cycle time for the fixture set-up of various approaches in automated fixturing systems.

A prototype flexible fixturing system is developed to study various aspects of automation of fixture design and construction for a computer-integrated assembly environment [15]. The fixturing system employs a number of fixture modules which are set-up, adjusted and changed automatically by the assembly robot without human intervention. The robot program for constructing and dismantling the designed fixture is generated automatically. One of the main obstacles to broader introduction of such automated systems, and the application of automatic task planning and programming techniques in a computer-integrated manufacturing (CIM) environment, is the high absolute positioning accuracy required of industrial robots to perform tasks such as constructing a fixture. The lack of absolute positioning accuracy of manipulators has been an important issue in process planning and part programming, and one which has usually required a great deal of time to be spent on the long and tedious procedure of teach-mode programming of these machines. It is worth emphasising that programming a robot to construct a fixture using teach-mode programming would be very difficult if not impossible. Therefore, it is essential to study the limitations of a reconfigurable fixturing system which uses an off-line generated program for assembly and disassembly of the fixture.

This paper presents an experimental investigation on the accuracy of a reconfigurable fixturing system in view of the automatic task planning and off-line programming approach

---

Correspondence and offprint requests to: Bijan Shirinzadeh, Monash University, Department of Mechanical Engineering, Clayton, Victoria 3168, Melbourne, Australia.

(Fig. 1). The primary function of a fixturing device is to locate the workpiece accurately in a desired position for presentation to NC machines or industrial robots. The secondary function of a fixturing device is to hold the workpiece in this position against forces exerted during manufacturing operations. In practice, accurate workpiece location is achieved by locators which are placed against machined surfaces of the workpiece, thus providing a datum for subsequent manufacturing operations. Therefore, in order to determine the accuracy of the proposed fixturing system, one needs to determine how accurately the locating fixture modules can be positioned, with respect to a known reference frame, on the fixture bed by an industrial robot. It must be emphasised that this study is concerned with flexible fixtures for assembly, thus low force and torque conditions are experienced by the workpiece and fixture.

Another important aspect of this study is to determine the cycle time required for constructing the fixture configuration. Therefore, the cycle times for setting-up and adjusting the fixture modules are also presented. These are analysed to provide an insight in the design of fixture modules, and planning and programming of fixture set-up, in order to improve accuracy and reduce cycle time for the fixture construction.

2. Reconfigurable Fixturing Strategy

The reconfigurable fixturing system employs a fixture bed and a number of adjustable fixture modules to locate and constrain the workpiece in the desired position and orientation [16]. An electromagnetic chuck is used as a base plate (i.e. fixture bed) to secure the fixture modules. Four types of fixture module have been designed for this purpose – vertical support, horizontal support, horizontal clamp, and vertical clamp. The robot retrieves a number of vertical supports from the fixture magazine and places these modules on the electromagnetic chuck. The robot proceeds to adjust the heights of these modules. These fixture modules support the workpiece at the required height. The electromagnetic chuck is activated before opening and closing during placement and adjustment operations. Thus, the position of the fixture modules are not affected during the operations performed by the robot end-effector during placement and adjustments.

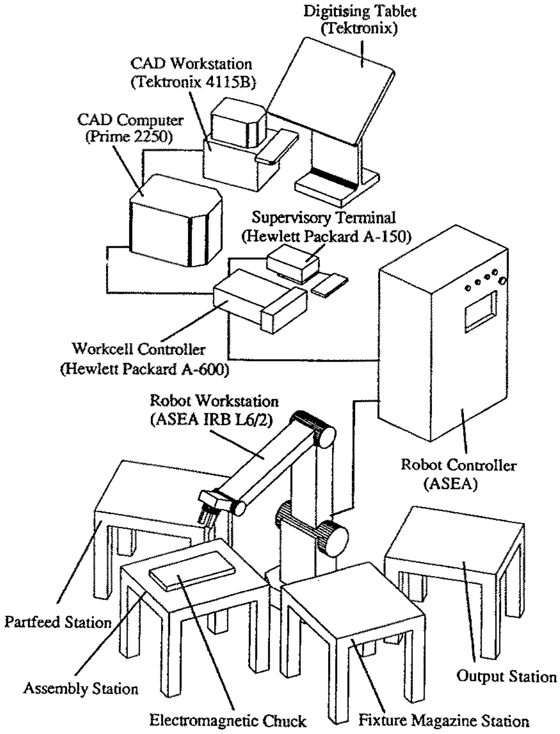

Fig. 1. Reconfigurable fixturing system structure.

Next, a number of horizontal supports are placed on the chuck. These are usually placed where they would be in contact with the workpiece reference surfaces or locating tabs. The horizontal supports serve as locators in the horizontal plane and also for guiding the workpiece into the desired position during the clamping operation which is performed by the horizontal clamps. The robot then places the workpiece within this fixture layout (referred to as the initial layout). A number of horizontal clamps and vertical clamps are then placed on the chuck. The robot adjusts the height of these modules and activates the clamping mechanisms, thereby fixturing the workpiece into the desired position and orientation. Fig. 2 shows an example of fixtured workpiece.

3. Experimental Set-Up and Procedure

The experimental set-up for this study was comprised of a manipulator, and a digitising tablet connected to a computer-aided design (CAD) workstation. The CAD package (Medusa), resident on a Prime computer, was used in conjunction with the digitising tablet to record the locations to which the robot was programmed to move. A probe was constructed and interfaced with the CAD workstation to emulate the digitising tablet's puck (i.e. pointing device). The probe was placed under the fixture modules and moved by the robot above the digitising tablet to record the locations. Several locations were chosen on the fixture bed as landmarks. Landmarks are locations indexed at 100 mm spacing from the

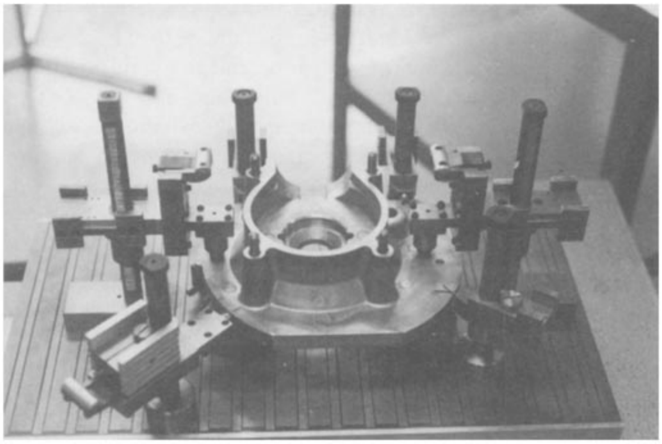

Fig. 2. Example of a fixtured workpiece.

fixture bed datum. The manipulator program was generated automatically, in the same manner as the fixture construction program, to move to the landmarks. Upon arrival at each landmark, X-Y coordinates of the robot carrying the fixture module (i.e. the probe) were recorded via the position of the probe's cross-hairs on the screen.

3.1 The Manipulator and End-Effector

The manipulator available for this study was an ASEA IRB L6/2 industrial robot. The robot is a six-degrees-of-freedom (i.e. six axis) manipulator with the load capacity of six (6) kilograms at the end of the fifth axis (i.e. fourth link). The manufacturer's specification indicates that the robot has a repeatability of better than ±0.2 mm at the end of the fifth axis when it is not carrying the third wrist motion unit. The robot was equipped with a parallel-jaw gripper system which was attached to the third wrist motion unit. The third wrist motion unit and the gripper weigh 2.2 kg and 2.0 kg, respectively. Thus, the remaining load capacity of the robot is 1.8–0.95 kg, depending on the distance between the end of the fourth link and the centre of gravity of the load being carried. The robot speed can be varied up to a maximum of 2000 mm s^{-1}.

3.2 The Probe

The digitising tablet's puck, which consists of a coil to pick up the position of the cross-hairs from the digitising tablet, was duplicated. The coil was wound around a plastic disk and housed into a circular piece made of Perspex material. Thus, the target of the coil is the centre of the coil which coincides with the centre of the housing. The probe was attached to the robot's end-effector for calibration, and under the fixture modules during the experiments.

3.3 The Digitising Tablet, CAD Workstation, and Computer

A Tektronix digitising tablet was used as a platform for measurements. The digitising tablet was placed at the assembly station at a reasonable distance above the electromagnetic chuck such that the residual magnetic field of the chuck would not affect the operation of the probe and the digitising tablet (Fig. 3). The digitising tablet was levelled and adjusted. A rectangular region with the dimensions 500 mm × 400 mm was selected. The adjustment operation included traversing the robot in the rectangular coordinate system while carrying the reference probe. The position measurements were obtained for two endpoints along the x-axis. The digitising tablet was adjusted such that the same reading in the X-direction was obtained for these two endpoints. The same operation was carried out for two endpoints on the y-axis. The procedure was repeated for both axes and a number of positions were selected between the endpoints to verify the alignment, and to check the set-up. The above procedure provides for a local reference frame on the assembly station and alignment of the matrix of the digitising tablet with this reference frame. Thus, the above experimental set-up allows all other subsequent measurements to be obtained with respect to a fixed frame of reference.

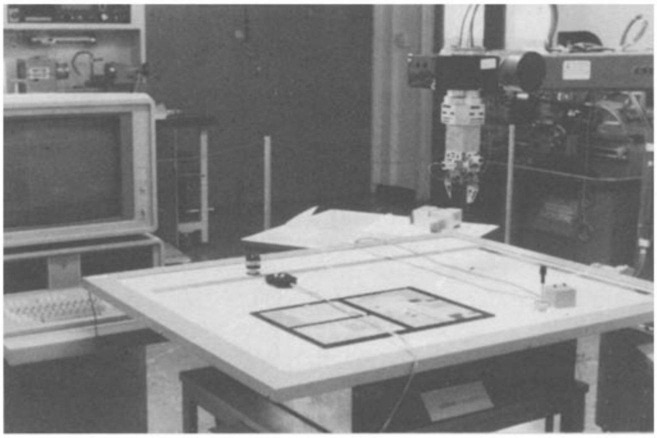

Fig. 3. Experimental set-up: robot, workstation, digitising tablet and probe.

Next, the original puck was used to calibrate the screen readings on the CAD drawing sheet to that of the physical dimensions in the robot coordinates. A magnifying eyepiece was used in conjunction with the puck to determine the scale factor for measurements in the X (i.e. XSCALE = 2.345) direction and in the Y (i.e. YSCALE = 2.279) direction. The resolution of the digitising tablet was measured using the above experiments to be 0.1 mm, which agrees with the specification provided by the manufacturer. Therefore, the accuracy of the digitiser may be conservatively taken as ±0.1 mm (i.e. accuracy is half of the resolution = ±0.05 mm). This was deemed to be adequate for our purpose since the robot itself has only a repeatability of ±0.2 mm. A Prime computer with resident Medusa CAD package was used to collect the experimental data. The experimental data consisted of X-Y coordinates of the landmarks as the manipulator, carrying the fixture modules, positioned itself above the digitising tablet repeatedly.

4. Datum Specification and Error Compensation

Research efforts have shown that off-line error compensation methods which use calibration results can improve absolute robot positioning accuracy without any changes in the robot control parameters [17–19]. Therefore, an off-line error compensation method was employed for this purpose. Strategies and software modules were developed to digitise robot workstations. This facility allows the operator to calibrate a workstation such as assembly, partfeed, etc. within the robot workcell and adjust the values of the off-line programmed locations and thereby improve the robot positioning accuracy for a particular workstation.

A precision-made rod, referred to as the "calibration rod", was attached to the centreline of the end-effector. The procedure requires the operator to jog (i.e. manually drive) the robot to various control locations (C_1–C_4), align the tip of the calibration rod with the control locations, and record their positions. Fig. 4 shows a schematic illustration of the above-mentioned procedure. The calibration software would then determine the reference datum for the workstation (i.e. $C1$), generate transformation vectors with respect to the robot base coordinate frame U, and determine the calibration factors for the workstation. In other words, the approach provides a datum transformation matrix and a calibration (i.e. correction) transformation matrix to adjust the preprogrammed positions. It must be noted that the tool centre-point (TCP) offset for the robot end-effector is set accordingly.

Fig. 5 shows the schematic diagram of the geometrical information. The following transformation matrix is formed.

$$T = \begin{bmatrix} v_1 & v_2 & v_3 & F_t \\ 0 & 0 & 0 & 1 \end{bmatrix} \tag{1}$$

where v_1, v_2 and v_3 are normalised vectors representing components of the orientation, and F_t represents components for the translation within the homogeneous transformation with respect to the robot base coordinate frame (i.e. universe frame). The vectors v_1 and v_2 are obtained from the position of the control points 1–2, and 1–3, respectively. The vector v_3 is obtained from the cross-product of the vectors v_1 and v_2.

As mentioned above, the locations of the control points are also used to obtain calibration factors to adjust the off-line programmed positions in the motion data files. The true physical lengths, l_x, l_y, and l_z, of the assembly station are employed for this purpose. These factors are determined as follows:

$$S_x = (x + \Delta x)/l_x \tag{2}$$

$$S_y = (y + \Delta y)/l_y \tag{3}$$

$$S_z = (z + \Delta z)/l_z \tag{4}$$

where S_x, S_y, and S_z represent the calibration factors within the designated workspace, l_x, l_y and l_z represent the true distances bounding the volume of the workstation, and $(x + \Delta x)$, $(y + \Delta y)$ and $(z + \Delta z)$ represent the actual movements by the robot for the specified distances as retrieved from the robot controller. The workstation bounded by the cube representation is shown in Fig. 5. The calibration factors were found to be 0.994, 0.997 and 0.999 in the X-, Y- and Z-directions, respectively.

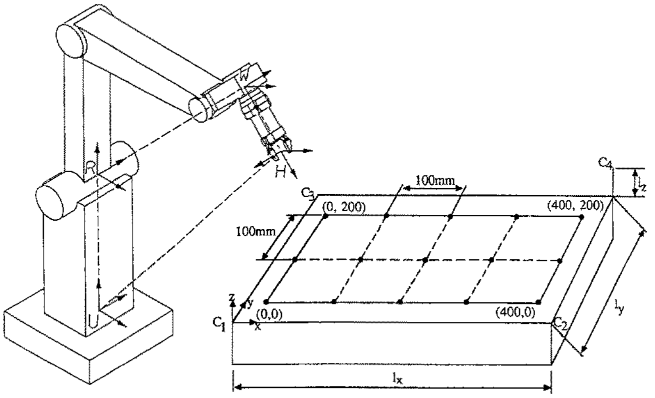

Fig. 4. Illustration of calibration procedure. U, universal coordinate frame; R, robot coordinate frame; W, wrist coordinate frame; H, hand coordinate frame.

It must be noted that the programmed locations are initially with respect to the robot base coordinate frame. These are retrieved from the motion data files and transformed to pose vectors with respect to the assembly station coordinate frame using the "model" transformation (i.e. ideal workstation location as used in the off-line programming system). The pose vectors are then corrected by the calibration factors obtained using equations (2), (3) and (4). In other words, the fixture assembly locations which have been programmed off-line are mapped onto the physical dimensions automatically using the calibration transformation. The corrected pose vectors are transformed back to the pose vectors with respect to the robot base coordinate frame using the "actual" transformation in equation (1). If the "model" transformation is acquired using the method described by equation (1), then the "actual" and "model" transformations will be equivalent, as was the case for these experiments. The approach not only provides for compensation of position errors but also change of the workstation location with respect to the robot base coordinate frame. It must be noted that the set-up of fixture modules is performed in four-dimensional (4D) space, three to position and one to orient.

5. Robot Accuracy and Calibration Verification

To determine the absolute accuracy of the robot, measurements were obtained using the reference probe in increments of 100 mm starting from the station coordinate frame, $X = 0$ and $Y = 0$. The above procedure also allows the establishment of a basis on which the subsequent measurements can be analysed, i.e. with the robot retrieving and physically positioning the fixture modules on the digitising tablet. Fig. 6 shows the reference probe being positioned on the digitising tablet during the experiment. It was found that the deviations were 0.6 mm in the X-direction, and 0.3 mm in the Y-direction for every 100 mm travel from the station coordinate frame. In other words, for 100.0 mm movement in the X- and Y-directions the robot moves 100.6 mm, and 100.3 mm in the X- and Y-directions, respectively. These results agree very well with correction factors obtained from the previous section.

5.1 Positioning Repeatability

The following formulations were used to obtain average repeatability of the manipulator based on collected data.

$$\bar{x} = \frac{1}{n}\sum_{i=1}^{n} x_i \tag{5}$$

$$\bar{y} = \frac{1}{n}\sum_{i=1}^{n} y_i \tag{6}$$

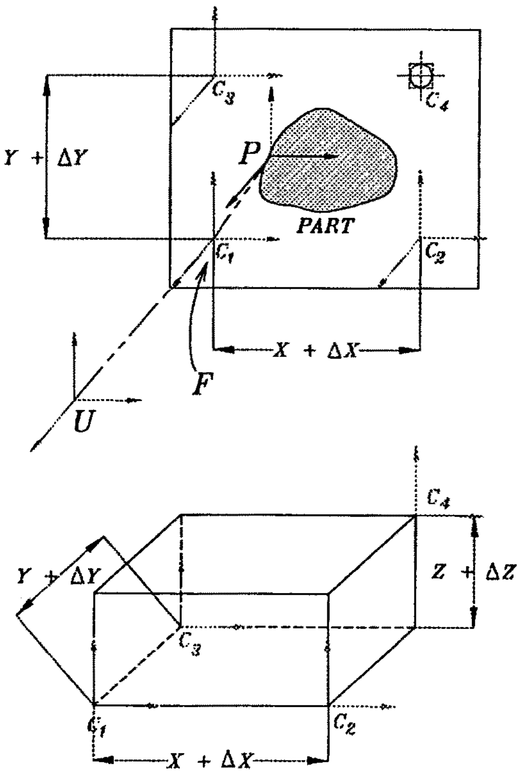

$$^{U}T_{P_{model}} = {}^{U}T_{F_{model}} \bullet {}^{F}T_{P_{model}}$$

$$^{U}T^{-1}_{F_{model}} \bullet {}^{U}T_{P_{model}} = {}^{U}T^{-1}_{F_{model}} \bullet {}^{U}T_{F_{model}} \bullet {}^{F}T_{P_{model}}$$
$$= {}^{F}T_{P_{model}}$$

$$^{U}T_{P_{calibrated}} = T_{\mathrm{Calibration}} \bullet {}^{F}T_{P_{model}}$$

$$^{U}T_{P_{actual}} = {}^{U}T_{F_{actual}} \bullet {}^{U}T_{P_{calibrated}}$$
$$= {}^{U}T_{F_{actual}} \bullet \begin{bmatrix} s_x & 0 & 0 & 0 \\ 0 & s_y & 0 & 0 \\ 0 & 0 & s_z & 0 \\ 0 & 0 & 0 & 1 \end{bmatrix} \begin{bmatrix} 1/s_x & 0 & 0 & x \\ 0 & 1/s_y & 0 & y \\ 0 & 0 & 1/s_z & z \\ 0 & 0 & 0 & 1 \end{bmatrix} \begin{bmatrix} & & & 0 \\ & \mathit{Orientation} & & 0 \\ & & & 0 \\ 0 & 0 & 0 & 1 \end{bmatrix}$$

Fig. 5. Schematic diagram of the geometrical aspects of the workstation.

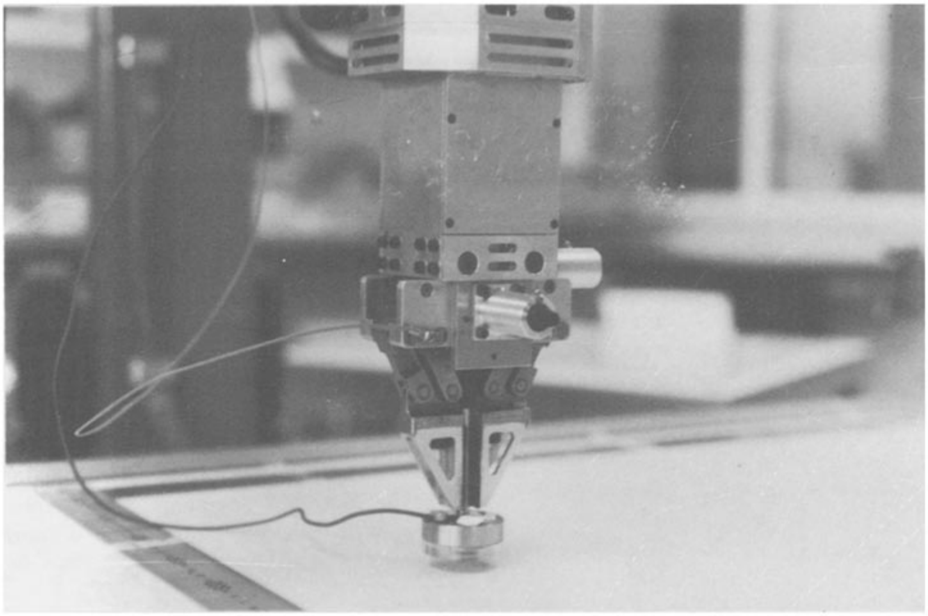

Fig. 6. Robot positioning the reference probe on the digitising tablet.

$$r_i = ((x_i - \bar{x})^2 + (y_i - \bar{y})^2)^{\frac{1}{2}} \qquad (7)$$

$$\bar{r} = \frac{1}{n} \sum_{i=1}^{n} r_i \qquad (8)$$

where x_i is the x-coordinate of position measurement, y_i is the y-coordinate of position measurement, $\bar{x}$ is the average value of measured x-coordinate, $\bar{y}$ is the average value of measured y-coordinate, r_i is the repeatability for cycle i, $\bar{r}$ is the average repeatability, and n is the total number of measurements for each programmed position ($n = 10$). The repeatability was found to be better than ±0.1 mm (i.e. $\bar{r} = \pm 0.03$ mm) for the set speed (10% of max speed of 2000 mm s^{-1}) and load. This agrees with the specifications supplied by the robot manufacturer.

5.2 Positioning Errors before Correction

The following equations were used to determine the absolute positioning errors for measurements before calibration factors are introduced.

$$e_{x_i} = x_i - x_s \quad (i = 1, \dots, n) \tag{9}$$

$$e_{y_i} = y_i - y_s \quad (i = 1, \dots, n) \tag{10}$$

$$\bar{e}_x = \frac{1}{n}\sum_{i=1}^{n} e_{x_i} \tag{11}$$

$$\bar{e}_y = \frac{1}{n}\sum_{i=1}^{n} e_{y_i} \tag{12}$$

where x_s and y_s are the x- and y-coordinates of the position settings, x_i and y_i represent the x- and y-coordinates of measured position value, i signifies the identification number for the individual measured position value, n is the total number of measurements for each programmed position, e_{x_i} and e_{y_i} represent the error from the individual position measurement in x- and y-coordinates, and $\bar{e}_x$ and $\bar{e}_y$ represent the average errors in x- and y-coordinates.

5.3 Positioning Errors after Correction

The following equations were employed to determine the errors after the calibration had been performed on programmed positions as described in the previous section.

$$e_{cx_i} = cx_i - x_s \quad (i = 1, \dots, n) \tag{13}$$

$$e_{cy_i} = cy_i - y_s \quad (i = 1, \dots, n) \tag{14}$$

$$\bar{e}_{cx} = \frac{1}{n}\sum_{i=1}^{n} e_{cx_i} \tag{15}$$

$$\bar{e}_{cy} = \frac{1}{n}\sum_{i=1}^{n} e_{cy_i} \tag{16}$$

where cx_i and cy_i represent the errors for position measurements after calibration in x- and y-coordinates, e_{cx_i} and e_{cy_i} represent the deviation of the measurements from the set positions in x- and y-coordinates, and $\bar{e}_{cx}$ and $\bar{e}_{cy}$ represent the mean error for the above. Table 1 shows the programmed positions via a grid as set values (i.e. x_s, y_s). The number of measurements was ten (i.e. $n = 10$). The table is organised as follows:

Values in $(\bar{x}, \bar{y})$ indicate the position measurements without correction (equations (5) and (6)).

Values in $[\bar{e}_x, \bar{e}_y]$ indicate the mean errors for measurements without correction (equations (11) and (12)).

Values in $\{\bar{e}_{cx}, \bar{e}_{cy}\}$ indicate mean errors for measurements after correction (equations (15) and (16)).

It can be observed that the robot can be positioned, after calibration, with the following accuracy:

x-axis	max: − 0.2 mm − +0.15 mm	min: 0.0 mm
y-axis	max: − 0.1 mm − +0.2 mm	min: 0.0 mm

Here, for the purpose of comparison a parameter defined as an average accuracy over the entire calibrated region is introduced using the following relationships:

$$\bar{e}_{cx_a} = \pm\frac{1}{m}\sum_{i=1}^{m} |\bar{e}_{cx_i}| \tag{17}$$

$$\bar{e}_{cy_a} = \pm\frac{1}{m}\sum_{i=1}^{m} |\bar{e}_{cy_i}| \tag{18}$$

where $\bar{e}_{cx_a}$ and $\bar{e}_{cy_a}$ are the average errors in the x- and y-axes, respectively, and m is the number of data locations at the station (i.e. $m = 15$). The average accuracy over the entire selected region was determined as ±0.08 mm for the x-axis, and ±0.07 mm for the y-axis.

5.4 Positioning Errors in *Z*-Direction

The robot is required to operate at 55, 130, 134, and 180 mm above the assembly station coordinate frame in order to place and adjust the vertical support, horizontal support, horizontal clamp, and vertical clamp, respectively. Therefore, in order to determine the accuracy of the robot in the Z-direction and emulate the height adjustment operations on the fixture modules, the robot was moved to the assembly station coordinate frame and a reference reading was taken using a height gauge. The robot was then moved in two increments of 100 mm in the upward direction and the displacements were measured (Fig. 7). The procedure was carried out on the grid as described previously. The means for the measurements were 100.1 and 200.2 mm, thus providing a deviation of ±0.2 mm from the programmed position before calibration. Again, this agrees with the correction factor (i.e. $S_z = 0.999$) observed from the previous section. The deviation

Table 1. Results of measurements for robot positioning accuracy.

	{+0.1, +0.1}	{−0.1, −0.1}	[+0.1, 0.0]	{+0.1, +0.1}	{0.0, 0.0}	$\{\bar{e}_{cx}, \bar{e}_{cy}\}$
	[+0.1, +0.7]	[+0.5, +0.5]	[+1.3, +0.6]	[+1.9, +0.7]	[+2.4, +0.6]	$[\bar{e}_x, \bar{e}_y]$
200	(0.1, 200.7)	(100.5, 200.5)	(201.3, 200.6)	(301.9, 200.7)	(402.4, 200.6)	$(\bar{x}, \bar{y})$
y_s	{+0.15, −0.1}	{+0.1, 0.0}	{−0.2, −0.1}	{−0.1, +0.1}	{0.0, 0.0}	$\{\bar{e}_{cx}, \bar{e}_{cy}\}$
(mm)	[+0.15, +0.2]	[+0.7, +0.3]	[+1.0, +0.2]	[+1.7, +0.4]	[+2.4, +0.3]	$[\bar{e}_x, \bar{e}_y]$
100	(0.15, 100.2)	(100.7, 100.3)	(201.0, 100.2)	(301.7, 100.4)	(402.4, 100.3)	$(\bar{x}, \bar{y})$
	{0.0, 0.0}	{0.0, +0.2}	{−0.1, +0.1}	{−0.1, +0.15}	{0.0, +0.1}	$\{\bar{e}_{cx}, \bar{e}_{cy}\}$
	[0.0, 0.0]	[+0.6, +0.2]	[+1.1, +0.1]	[+1.7, +0.15]	[+2.4, +0.1]	$[\bar{e}_x, \bar{e}_y]$
0	(0.0, 0.0)	(100.6, 0.2)	(201.1, 0.1)	(301.7, 0.15)	(402.4, 0.1)	$(\bar{x}, \bar{y})$
	0	100	200	300	400	
			x_s (mm)			

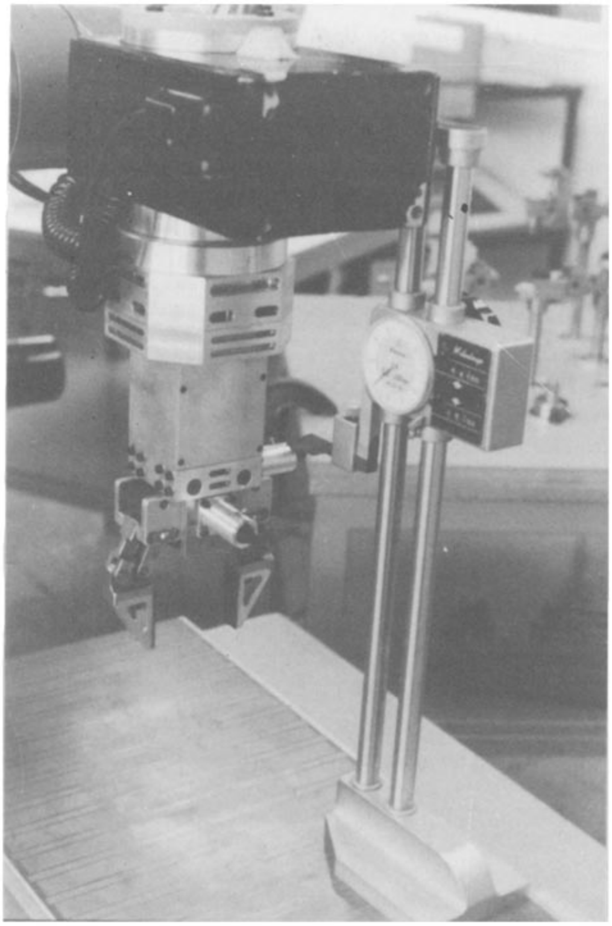

Fig. 7. Measurement of robot accuracy in the z-direction.

from the programmed position was measured as ±0.1 mm after employing the correction factor.

6. Position Measurements for Locators

6.1 Vertical Support Set-Up Accuracy

To determine the absolute accuracy of the robot positioning the vertical support fixture module, the robot repeatedly retrieved the vertical support from the fixture magazine and positioned it on the digitising tablet at the set increments (Fig. 8). Table 2 shows the results of measurements obtained during the experiments. It was found that the vertical support could be positioned, after calibration, with the following accuracy:

x-axis	max: − 0.3 mm	min: 0.0 mm
y-axis	max: − 0.4 mm	min: − 0.1 mm

The average accuracy for positioning the vertical support was obtained using equations (17) and (18) as ±0.15 mm for x-axis, and ±0.27 mm for the y-axis over the entire calibrated region.

The accuracy of the height adjustment operation on the vertical support was measured using a height gauge. The robot repeatedly retrieves the vertical support from the magazine, places it on the magnetic chuck, and adjusts the height of it. The height gauge was used to measure the position of the tip with respect to the assembly station coordinate frame (Fig. 9). It was found that the robot can repeatedly adjust the height to within ±0.05 mm of the set height. This was expected since the vertical support mechanism is comprised of an adjustment shaft with 1.5 mm pitch external thread and two pawls having a thread of the same pitch to lock the shaft in position (Fig. 10). When the robot pushes down on the "zero adjustment" levers, the locking pieces rotate about the pivot points. This action compresses the return springs, forcing the pawls to disengage from the shaft and allowing the shaft to fall down to the zero position under gravitational force. When the levers are released the return springs push the locking pieces back into the locked position [16].

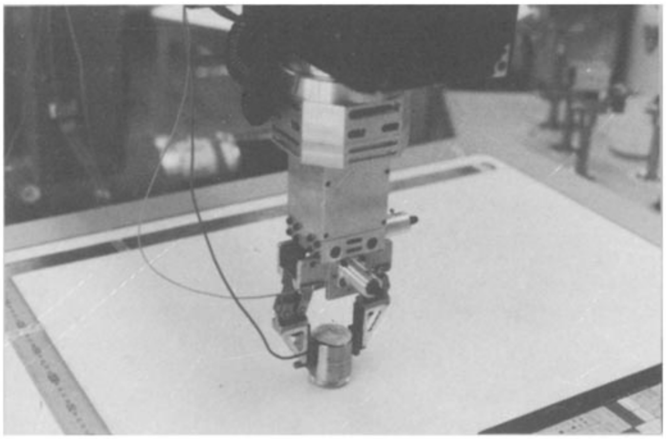

Fig. 8. Robot positioning the vertical support on the digitising tablet.

In order to adjust the height of the contact surface, the robot grasps the support shaft on the "height adjustment" flats and pulls up the shaft for the discrete adjustment. It must be noted that the differential adjustment of the vertical support height is performed by simultaneous rotation about the z-axis and upward movement of the shaft. The robot is only required to position the adjustment shaft within the vicinity of the pitch of the thread (i.e. 1.5 mm) and the return springs push the locking mechanism into the correct position, thus positioning the shaft at the correct height. It must be noted that the accuracy of the orientation setting is based on the rotational accuracy of the sixth joint (i.e. yaw) which is specified by the manufacturer as ±2 minutes of arc.

6.2 Horizontal Support Set-Up Accuracy

Similar experiments were carried out for the horizontal support as shown in Fig. 11. The results of the measured values against the programmed positions are shown in Table 3. It was found that the horizontal support can be positioned with the following accuracy:

x-axis	max: − 0.6 mm	min: − 0.2 mm
y-axis	max: − 0.6 mm	min: − 0.2 mm

Table 2. Results of position measurements for the vertical support.

y_s (mm) 200	{+0.1, −0.4} [+0.1, +0.2] (0.1, 200.2)	{−0.2, −0.3} [+0.4, +0.3] (100.4, 200.3)	{−0.2, −0.4} [+1.0, +0.2] (201.0, 200.2)	{−0.2, −0.2} [+1.6, +0.4] (301.6, 200.4)	{−0.2, −0.2} [+2.2, +0.4] (402.2, 200.4)	$\{\bar{e}_{cx}, \bar{e}_{cy}\}$ $[\underline{e}_x, \underline{e}_y]$ $(\underline{x}, \underline{y})$
100	{−0.1, −0.4} [−0.1, −0.1] (−0.1, 99.9)	{−0.3, −0.4} [+0.3, −0.2] (100.3, 99.9)	{−0.3, −0.4} [+0.9, +0.1] (200.9, 99.9)	{−0.1, −0.3} [+1.7, 0.0] (301.7, 100.0)	{0.0, −0.4} [+2.4, −0.1] (402.4, 99.9)	$\{\bar{e}_{cx}, \bar{e}_{cy}\}$ $[\underline{e}_x, \underline{e}_y]$ $(\underline{x}, \underline{y})$
0	{0.0, −0.2} [0.0, −0.2] (0.0, −0.2)	{−0.1, −0.3} [+0.5, −0.3] (100.5, −0.3)	{−0.2, −0.1} [+1.0, −0.1] (201.0, −0.1)	{−0.2, −0.2} [+1.6, −0.2] (301.6, −0.2)	{−0.1, −0.2} [+2.3, −0.2] (402.3, −0.2)	$\{\bar{e}_{cx}, \bar{e}_{cy}\}$ $[\underline{e}_x, \underline{e}_y]$ $(\underline{x}, \underline{y})$
x_s (mm)	0	100	200	300	400	

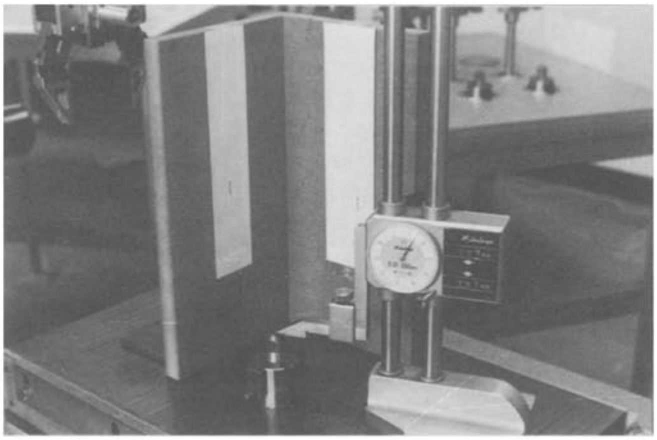

Fig. 9. Position measurement of the height adjustment operation on the vertical support.

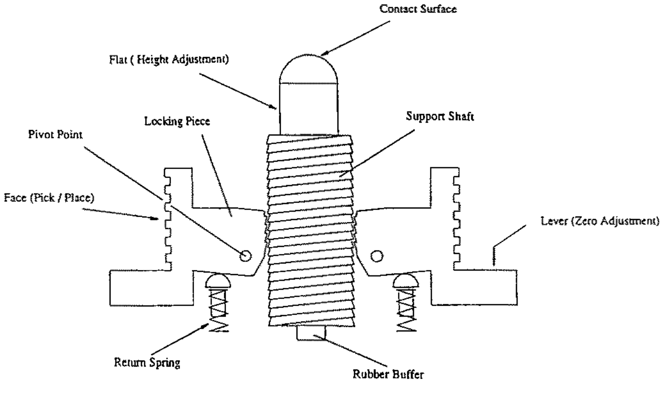

Fig. 10. Schematic diagram of the internal mechanism of the vertical support.

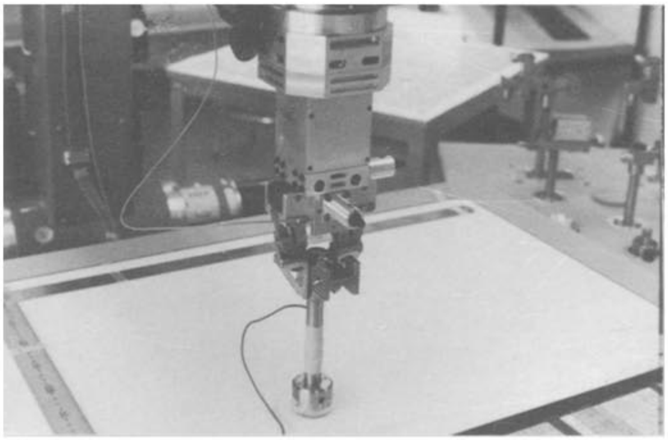

Fig. 11. Horizontal support positioned on the digitising tablet.

Therefore, the average accuracy for positioning the horizontal support was obtained as ±0.37 mm for the x-axis, and ±0.35 mm for the y-axis over the entire calibrated region. One of the main reasons for the increase in the positioning errors for the horizontal support is the size of this particular module. The robot TCP is required to be positioned at approximately 130 mm above the surface of the fixture bed during the placement of the horizontal support on the fixture bed. Errors due to the slippage of the horizontal support in the gripper jaws, misalignment of the gripper jaws, and robot drive compliance is magnified by the height of the fixture module. This situation is represented in a schematic diagram shown in Fig. 12. It must be noted that large deviations due to rotation of the grasp point may further be increased by the orientation setting.

Special grippers may be used to reduce the effect of such errors. For example, to ensure that the gripper jaws are placed at the same location every time the fixture module is grasped, a pair of locating pins may be attached to each fixture module [20]. Then accurate and repeatable grasping can be accomplished when the gripper jaws push against the locating pins, ensuring that the fixture module is held rigidly against any unwanted rotation about the grasp point. Another solution would be to employ a special gripper to grasp the fixture module at the base. Incorporating locating pins at the base can further improve the accuracy and repeatability of the grasp operations. These measures would not only eliminate the possibility of rotation, but also reduce the effect of misalignment of the gripper jaws. It was found that the height of the horizontal support can be adjusted to within ±0.1 mm. In this case the adjustment accuracy is based on the accuracy of the robot after workstation calibration, since there is no discrete adjustment mechanism on the horizontal support (i.e. the adjustment is continuous), as in the case of the vertical support.

Table 3. Results of position measurements for the horizontal support.

200	{−0.2, −0.3} [−0.2, +0.3] (−0.2, 200.3)	{−0.2, −0.3} [+0.4, +0.3] (100.4, 200.3)	{−0.5, −0.2} [+0.7, +0.4] (200.7, 200.4)	{−0.4, −0.3} [+1.4, +0.3] (301.4, 200.3)	{−0.4, −0.2} [+2.0, +0.4] (402.0, 200.4)	$\{\bar{e}_{cx}, \bar{e}_{cy}\}$ $[e_x, e_y]$ (x, y)
y_s(mm) 100	{−0.3, −0.3} [−0.3, 0.0] (−0.3, 100.0)	{−0.3, −0.3} [+0.3, 0.0] (100.3, 100.0)	{−0.6, −0.3} [+0.6, 0.0] (200.6, 100.0)	{−0.5, −0.4} [+1.3, −0.1] (301.3, 99.9)	{−0.5, −0.3} [+1.9, 0.0] (401.9, 100.0)	$\{\bar{e}_{cx}, \bar{e}_{cy}\}$ $[e_x, e_y]$ (x, y)
0	{−0.2, −0.3} [−0.2, −0.3] (−0.2, −0.3)	{−0.3, −0.4} [+0.3, −0.4] (100.3, −0.4)	{−0.4, −0.5} [+0.8, −0.5] (200.8, −0.5)	{−0.6, −0.6} [+1.3, −0.6] (301.2, −0.6)	{−0.4, −0.5} [+2.0, −0.5] (402.0, −0.5)	$\{\bar{e}_{cx}, \bar{e}_{cy}\}$ $[e_x, e_y]$ (x, y)
	0	100	200	300	400	
			x_s (mm)			

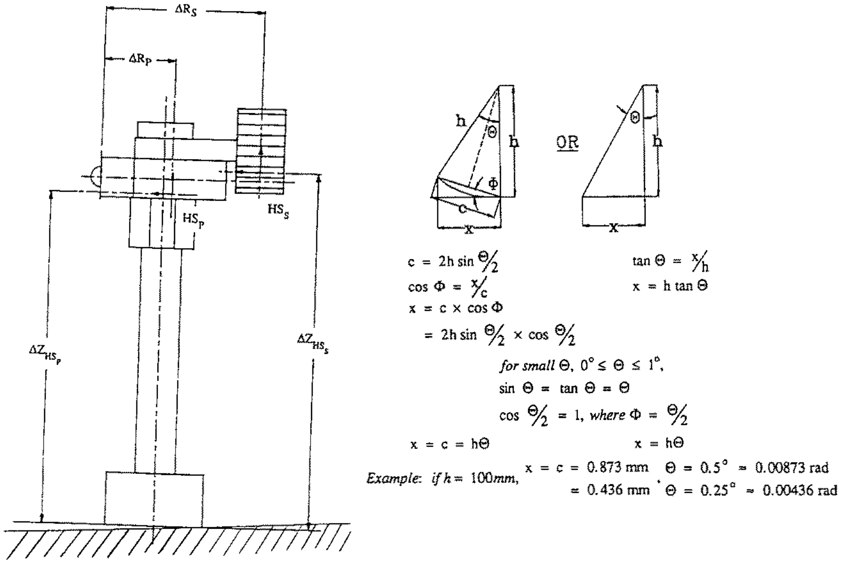

Fig. 12. Schematic diagram of rotation about grasp point on the horizontal support.

7. Discussion of Accuracy of Locators

The experimental results have exhibited deviations, in some cases, as much as −0.6 mm from the programmed positions. Some of the factors responsible for these deviations are as follows:

The accuracy of the digitiser used to measure the robot positioning capability will contribute to the uncertainty of the results obtained. The accuracy of the digitiser was found to be conservatively better than ±0.1 mm, as described in the section on the "experimental set-up and procedure". This was deemed to be sufficient accuracy for these experiments.

Errors in robot parameters including kinematic and dynamic parameters will contribute to inaccuracies of robot positioning and movement. In general, kinematic parameters affect "pose" accuracy and dynamic parameters affect "trajectory" accuracy. The detailed treatment of these and other factors affecting robot performance may be found elsewhere [21,22]. However, pose accuracy may be improved by calibration of the small designated robot workspace for various payloads, robot speeds, and approach directions.

Errors in the initial position of the fixture modules at the magazine station will result in errors propagating to the assembly station. These errors may be reduced by employing the robot to mark the position of the individual fixture module at the magazine station. This was carried out for this experimental set-up.

As the payload (i.e. fixture module) carried by the robot is increased, errors are introduced owing to the drive compliance, deflection or bending of the links, etc. These errors may be minimised by using lightweight material for the construction of the fixture modules.

The approach relies heavily on the gripper to retrieve, set-up and perform adjustment operations on the fixture modules. Therefore, inaccuracies due to slippage, worn-out linkages, etc. will produce higher deviations for larger fixture modules as described previously. This is observed as the average accuracy is increased from ±0.08 mm to ±0.37 mm for the reference probe and horizontal support, respectively.

```
do j = 1, number of vertical supports
        moveto vspadm (j)         * approach j-th vertical support position @ magazine station
        moveto vspm (j)           * pick j-th vertical support @ magazine station
        close gripper 2           * grasp j-th vertical support @ magazine station (wait 2 sec.)
        moveto vspadm (j)         * depart j-th vertical support position @ magazine station
        moveto vspada (j)         * approach j-th vertical support position @ assembly station
        moveto vspa (j)           * place j-th vertical support @ assembly station
        activate chuck            * activate electromagnetic chuck
        open gripper 2            * release j-th vertical support @ assembly station (wait 2 sec.)
        deactivate chuck          * deactivate electromagnetic chuck
        moveto vspada (j)         * depart j-th vertical support position @ assembly station
enddo
c
activate chuck                    * to perform the height adjustments
c
do j = 1, number of vertical supports
        moveto vsada (j)          * approach (i.e., move above) j-th vertical support to zero its height
                                  * @ assembly station
        moveto vsza (j)           * zero j-th vertical support @ assembly station
        moveto vssa (j)           * move to set position the j-th vertical support @ assembly station
        close gripper 2           * grasp the height adjustment shaft (wait 2 sec.)
        moveto vsdhi (j)          * adjust the incremental setting on the j-th vertical support @
                                  * assembly station
        moveto vsdhd (j)          * adjust the differential setting on the j-th vertical support @
                                  * assembly station [differential adjustment requires orientation change
                                  * of the TCP (i.e., tool rotation) + upward move, simultaneously]
        open gripper 2            * release the height adjustment shaft (wait 2 sec.)
        moveto vsada (j)          * depart j-th vertical support
enddo
c
deactivate chuck                  * deactivate electromagnetic chuck
c
```

Fig. 13. The fixture planning and programming sequence for the robot to set-up the vertical support.

Finally, the use of a fixture bed with a series of tapered holes in small increments and incorporating a locating pin underneath the fixture modules, would allow improvement of the accuracy of such systems. This approach would allow accuracy to the same tolerances with which the holes may be manufactured using numerically controlled (NC) machines. This improvement in accuracy is obtained at a cost of loss of flexibility, since the fixture modules may only be placed on the grid. Therefore, fixture modules may have to be designed such that they can address areas between the grid.

8. Cycle Time for Fixture Construction

The construction of the fixture requires the retrieval, placement, and adjustment of individual fixture modules by the robot. Therefore, experiments were carried out to determine the approximate cycle time to set-up different types of fixture modules. The experiments comprised of recording the time to retrieve the fixture modules from the magazine, place it on the fixture bed, and perform the adjustment operations. These experiments were conducted at various robot speeds.

In order to analyse the cycle time for the fixture construction and identify strategies for improvements, the fixture set-up was decomposed into individual operations based on the fixture planning and programming sequence for each fixture module. As an example, the fixture planning and programming sequence for the robot to set-up the vertical support is given in Fig. 13. The planning and sequencing of operations on a horizontal support, and horizontal and vertical clamps follow a similar approach.

The cycle time was divided into robot movement time, and wait time for the operation of peripheral devices such as the gripper. The location of the fixture module in the magazine and on the fixture bed varies, depending on which fixture module is being retrieved and on the fixture layout design. Therefore, average values were used for travel distance and movement time. The experiments were conducted for individual movements to obtain individual cycle time. Each movement requires at least three separate telegrams (i.e. commands) to be sent from the workcell controller (i.e. HP A-600) to the robot controller. These include start command, move command, and end command. The robot controller does not send a positive response (i.e. acknowledgment) back to the workcell controller until the robot has reached the programmed position. Therefore, there exists a time delay, and the cycle time for a move cannot be shorter than 1 s.

Tables 4 and 5 show the results of the experiments for vertical support and horizontal support, respectively. The vertical support can be set-up in 41.5, 32, and 26 s, at 5%, 10%, and 20% of the maximum speed, respectively. The maximum speed of the robot was set at 2000 mm s^{-1} (i.e. speed set at 10% = 200 mm s^{-1}). The horizontal support can be set-up at the assembly station in 46, 32, and 27 s when robot speeds are set at 5%, 10%, and 20% of the maximum speed, respectively. Therefore, a fixture layout comprising of four vertical supports, three horizontal supports, two horizontal clamps, and two vertical clamps has a calculated (i.e. predicted) cycle time of 384 s for robot speed of 200 mm s^{-1}. The predicted cycle time agrees well with the actual time of 392 s recorded for the entire fixture construction.

However, these cycle times may be improved by reducing the robot travel distance during retrieval, and placement of the fixture modules. Furthermore, the robot speed can be increased when it is not carrying the fixture module and/or carrying smaller fixture modules such as vertical supports.

Table 4. Cycle time for vertical support set-up.

Operation	Average travel distance (mm)	Wait time (s)	Time at 5% speed	Time at 10% speed	Time at 20% speed
Approach to vertical support at magazine station (vspadm)	600		7	4.5	2
Pick vertical support at magazine station (vspm)	100		1.5	1	1
Grasp vertical support		2			
Depart vertical support at magazine station (vspadm)	100		1.5	1	1
Approach vertical support position at assembly station (vspada)	600		7	4.5	2
Place vertical support at assembly station (vspa)	100		1.5	1	1
Activate chuck		2			
Release vertical support		2			
Deactivate chuck		2			
Depart vertical support at assembly station (vspadm)	100		1.5	1	1
Approach vertical support at assembly station (vspada)	200		2.5	1.5	1
Zero vertical support at assembly station (vsza)	100		1.5	1	1
Move to set vertical support at assembly station (vssa)	40		1	1	1
Grasp height adjustment shaft		2			
Adjust incremental setting at assembly station (vsdhi)	10		1	1	1
Adjust differential setting at assembly station (vsdhd)	1		2	1	1
Release height adjustment shaft		2			
Depart vertical support at assembly station (vsada)	100		1.5	1	1
Subtotal	2050	12	29.5	20	14
Total (wait time + move time)			41.5	32	26

The waiting time for the operation of peripheral equipment may also be reduced to improve the cycle time. As an example, if the "wait time" or the operation of the gripper, and activation and deactivation of the electromagnetic chuck is reduced to 1 s, the cycle time for set-up of the vertical support at 10% and 20% of maximum robot speed will be reduced to 26 and 20 s, respectively.

9. Conclusion

An experimental investigation of the performance of a reconfigurable fixturing system is presented. The study has shown the accuracy with which the fixture construction may be performed in view of the off-line programming technique, and without incorporating special design of the fixture bed and gripper. The factors for the inaccuracies and possible measures for improvement were discussed. The cycle time to construct the fixture layout has been presented. Possible measures to improve the cycle time have also been discussed. These results may be employed as a guide to determine the grouping of parts, with similar accuracy and cycle time requirements, which may be fixtured using the same or a similar approach. The results also emphasise that flexible fixturing technology is generally suited to low-to-medium volume manufacturing environment.

Acknowledgements

This study was carried out using the facilities in the Department of Mechanical Engineering, University of Western Australia. B. S. wishes to thank the staff of the Mechanical Engineering Department and Associate Professor J. P. Trevelyan in particular for his numerous suggestions during the course of the study.

References

1. B. S. Thompson, "Flexible fixturing – a current frontier in the evolution of flexible manufacturing cells", *ASME Paper* 84 – WA/Prod-16, 1984.

Table 5. Cycle time for horizontal support set-up.

Operation	Average travel distance (mm)	Wait time (s)	Time at 5% speed	Time at 10% speed	Time at 20% speed
Approach to horizontal support at magazine station (hspadm)	700		8	5	3
Pick horizontal support at magazine station (hspm)	100		1.5	1	1
Grasp horizontal support		2			
Depart pick position at magazine station (hspadm)	100		1.5	1	1
Approach horizontal support position at assembly station (hspada)	900		10	6	4
Place horizontal support at assembly station (hspa)	100		1.5	1	1
Activate chuck		2			
Release horizontal support		2			
Deactivate chuck		2			
Depart horizontal support at assembly station (hspadm)	100		1.5	1	1
Approach horizontal support at assembly station (hspada)	200		3	2	1
Move horizontal support at assembly station (hssa)	100		2	1	1
Grasp height adjustment block		2			
Adjust horizontal support height at assembly station (hsha)	50		1.5	1	1
Release height adjustment block		2			
Depart horizontal support at assembly station (hsada)	150		2.5	1	1
Subtotal	2500	12	34	20	15
Total (wait time + move time)			46	32	27

2. B. S. Thompson and M. V. Gandhi, "A commentary on flexible fixturing", *Applied Mechanics Reviews*, **39**(10), October 1986.
3. B. Krauskopf, "Fixtures for small batch production", *Manufacturing Engineering*, pp. 41–43, January 1984.
4. J. C. Trappey and C. R. Liu, "A literature survey of fixture-design automation", *The International Journal of Advanced Manufacturing Technology*, **5**, pp. 240–255, 1990.
5. M. V. Gandhi and B. S. Thompson, "Automated design of modular fixtures for flexible manufacturing systems", *Journal of Manufacturing Systems*, **5**(4), pp. 243–252.
6. P. M. Grippo, M. V. Gandhi and B. S. Thompson, "The computer-aided design of modular fixturing systems", *The International Journal of Advanced Manufacturing Technology*, **2**, pp. 75–88, 1987.
7. J. Cabadaj, "Theory of computer aided fixture design", *Computers in Industry*, **15**, pp. 141–147, 1990.
8. J. R. Beerma and H. J. Kals, "FIXES, a system for automatic selection of set-ups and design of fixtures", *Annals of the CIRP*, **37**, pp. 443–446, January 1988.
9. A. Markus, Z. Ruttkay and J. Vancza, "Automating fixture design – from imitating practice to understanding principles", *Computers in Industry*, **14**, pp. 99–108, 1990.
10. D. T. Pham and A. Lazaro, "Autofix – an expert CAD system for jigs and fixtures", *International Journal of Machine Tools Manufacturing*, **30**(3), pp. 403–411, 1990.
11. B. O. Nnaji and P. Lyu, "Rules for an expert fixturing system on a CAD screen using flexible fixtures", *Journal of Intelligent Manufacturing*, **1**, pp. 31–48, 1990.
12. A. J. C. Trappey and C. R. Liu, "Automated fixture configuration using projective geometry", *The International Journal of Advanced Manufacturing Technology*, **8**, pp. 297–304, 1993.
13. L. S. King and I. Hutter, "Theoretical approach for generating optimal fixturing locations for prismatic workparts in automated assembly", *Journal of Manufacturing Systems*, **12**(5), pp. 409–416, 1993.
14. A. J. C. Trappey and S. Matrubhutam, "Fixture configuration using projective geometry", *Journal of Manufacturing Systems*, **12**(6), 1993.
15. B. Shirinzadeh, "A CAD-based design and analysis system for reconfigurable fixtures in robotic assembly", *Computing and Control Engineering Journal*, **5**(1), pp. 41–46, 1994.
16. B. Shirinzadeh, "Issues in the design of the reconfigurable fixture modules for robotic assembly", *Journal of Manufacturing Systems*, **12**(1), pp. 1–14, 1993.
17. G. Duelen and K. Schröer, "Robot calibration – method and results", *Journal of Robotics and Computer-Integrated Manufacture*, **8**(4), pp. 223–231, 1991.
18. J. O. Berg, "Robot calibration for off-line programming", *Industrial Robot*, **18**(2), pp. 19–31, 1991.
19. G. R. Tang and L. S. Liu, "A comparison of calibration methods based on flat surfaces", *Proceedings of Second International Conference on Automation, Robotics and Computer Vision, Singapore*, pp. RO 14.3.1–5, 1992.
20. H. Asada and A. Fields, "Design of flexible fixtures reconfigured by robot manipulators", *Proceedings of Robotics and Manufacturing Automation, ASME Winter Annual Meeting*, pp. 251–257, 1985.
21. V. Dukovski, "Robot accuracy and stiffness – an experimental study", *Journal of Robotics and Computer-Integrated Manufacture*, **7**(3/4), pp. 321–326, 1990.
22. H. Kochekali, A. Nowrouzi, Y. B. Kavina and R. A. Whitaker, "Factors affecting robot performance", *Industrial Robot*, **18**(1), pp. 9–13, 1991.