Chapter 11

Control Systems and Operational Sequence

The primary function of the control systems and operational sequence control of a wind turbine is to ensure that it will operate fully automatically. Any other approach requiring some manual intervention during normal operation would be entirely unacceptable from an economic point of view. Moreover, economical considerations demand from the control systems that maximum efficiency be achieved at every point of operation. This does not happen by itself but requires "intelligent" control systems.

Apart from these requirements, there are other tasks which must be fulfilled by the control systems and by the sequence controller. Among these, operational safety is of the highest priority. Technical faults and environmental hazards must be recognised and the safety mechanisms provided must be triggered. In addition, the control system's function is to contribute to minimising the structural loads on the wind turbine.

Not least, the control systems and the sequence controller are expected to be flexible enough to adapt the performance of the turbine to varied operating conditions without extensive technical modifications. Such adaptation can be provided by modern digital control technology through a mere change in the software. Although there is no precise distinction between the terms "control system" and "operational control" in practice, they do characterise different tasks (Fig. 11.1).

The sequence controller receives extern al inputs according to the operating conditions and, above all, the wind conditions and sometimes also the operator's intentions. This information will determine the set-point values for the control system. By this way the controller makes decisions concerning the mode of operation on the basis of logical deductions. It is implemented in a programmable process computer which is part of the central computer of the wind turbine.

The control system takes care of the internal control processes of the turbine. In a way, it represents the connecting link between the sequence controller and the mechanical and electrical components of the turbine. The control system must, therefore, be matched to the operating characteristics and structural strength limits of the turbine.

In wind turbines with blade-pitch control, the control and supervisory systems control three functional systems: rotor yawing, speed and power control and the operational sequence. Smaller wind turbines which frequently have no blade-pitch control also have no active speed and power control. Instead, passive aerodynamic power limiting and speed control are provided by the grid. But even in this simpler version, a supervisory and sequence control system is necessary for operation monitoring and controlling the operating sequence.

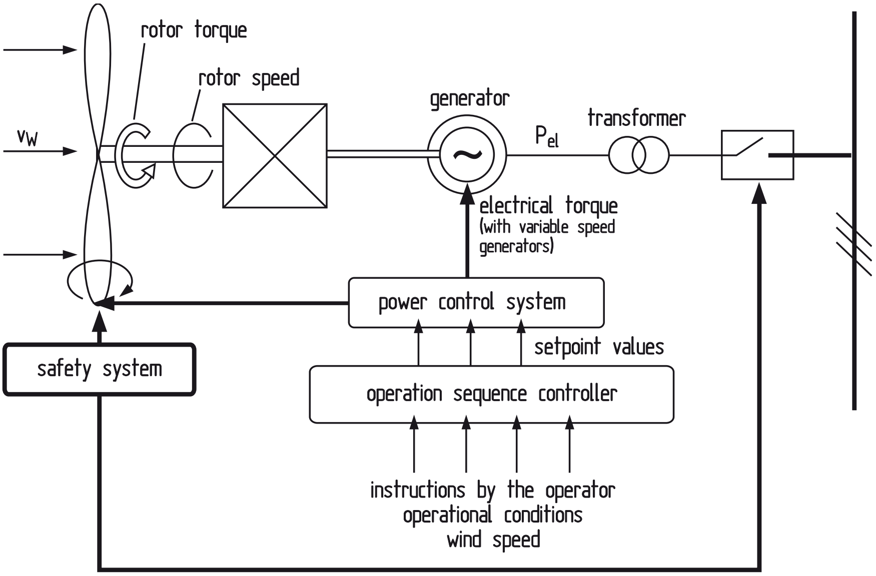

Fig. 11.1. Tasks of the control system and operational sequence control of a wind turbine [1]

The following discussion of the control problems of wind turbines is conducted with the same assumptions as that of the electric generator systems. The fundamentals of electrical machine control must be known or standard literature consulted [2].

11.1 Input Data Measurement

The tasks of the control system and of the operational sequence control of a wind turbine as outlined above require certain input signals, the acquisition of which, together with the subsequent processing of the measurement values, has a considerable influence on the quality of the control functions. The control system can be as good as its input signals.

The essential input for the controlling the operational sequence is the wind velocity. However, certain provisions from the electrical grid will also interact with the operational sequence. Power control is based on the direct measurement of the electrical power generated and does not need the wind speed as input signal. The rotor speed in variable-speed operation and sometimes the variation of the speed on starting and stopping the rotor are controlled by variation of the electrical torque of the generator. This requires a frequency inverter in the electrical system. The safety system will detect a whole number of state variables the thresholds of which can initiate a safety shutdown of the plant.

11.1.1 Wind Measuring System

Measuring the wind speed is necessary for controlling the operational sequence in order to switch between different modes of operation. Motorised yawing also requires information about wind direction. Small turbines may under some circumstances do without the measurement of these two parameters. The prerequisite for this is a passive, aerodynamic yaw system and an operating mode which uses the electrical power generated as an indicator of wind speed.

Power and rotational speed control is carried out without direct wind speed measurement, as already mentioned. An attempt to measure wind speed and to use this figure as a direct input value for control leads to considerable problems. Wherever the wind speed is measured, no single value is ever representative of the power generated by a large wind rotor sweeping an area of several thousand square meters. The inevitable consequence would be a wrong response by the rotor speed or power control. To avoid these difficulties, it is better to measure wind speed indirectly by means of the electric power output. The rotor itself is the only representative "wind measuring instrument" of a turbine.

Locality of wind measurement

The locality of the wind measurement needs to be chosen carefully since the air flow in close vicinity of the turbine is influenced considerably by the turning rotor. This means that the "true" wind speed is measured correctly by a sensor close to the rotor plane only when the rotor is at a standstill. If the turbine is started up too early on the basis of this signal, the wind speed is retarded by the rotating rotor and the turbine is switched off again if the retarded wind speed is then below the cut-in speed again. If the wind speed is just barely above the cut-in wind speed, this process could repeat itself any number of times.

If the measurement of wind speed and direction must not be influenced by the rotor, a point of measurement behind the rotor plane would have to be more than ten rotor diameters away. Apart from the fact that this would require the setting up of a separate mast for wind measurement, it would by no means provide a more accurate wind measurement. One single point of measurement, and at a considerable distance from the turbine at that, does not provide an aerodynamically representative value for the rotor-swept area. Wind measurement in front of the rotor plane does not solve this problem, either. Although the retardation of the air flow by the wind rotor "upwind" is not as perceptible as in the "wake", it is still large enough to corrupt the result in the immediate vicinity.

Considering the above, it is understandable why the operational wind measurement, regardless of the corruption of results in the immediate surroundings of the rotor plane, is usually taken on the roof of the nacelle (Fig. 11.2). At some earlier wind turbines, the anemometer was mounted on the tower, below the rotor radius. Whichever way, accurate wind speed measurement is not feasible. However, practical operation does not require an accurate wind measurement, as long as the "discrepancy" caused by the rotating rotor is known with some accuracy and is taken into consideration in the processing of the data obtained.

Correction of measured wind speed

The question arises, therefore, as to what extent the measured values are influenced by the rotor flow. Two contrary influences must be considered. According to Betz's theory, the free stream velocity is reduced to barely two thirds of the undisturbed value in the rotor plane in an ideal turbine. But this only applies to the ideal power coefficient of 0.593. A real wind turbine rotor with a distinctly lower power coefficient also produces less retardation to the air flow.

It can be assumed that a fast modern rotor with a maximum power coefficient of approx. 0.45 retards the wind speed in the rotor plane by approximately 25 % in nominal operation. At a rated wind speed of approximately 12 m/s, wind speed measurements on the nacelle roof behind the rotor will show a discrepancy of 2 to 3 m/s.

On the other hand, the flow past the nacelle leads to an accelerated air flow in its immediate vicinity, compared with which the retardation of the flow due to the rotor in the root area of the rotor blades is scarcely noticeable. The wind measuring system on the roof of the nacelle will, therefore, measure, as a rule, a wind speed which is increased by 1 to 1.5 m/s.

If the incident flow is at an angle for example caused by an inaccurate yaw position, the one-sided shading effect of the nacelle can also distort the wind speed and wind direction measurement. It is for this reason, but also for reasons of redundancy, that two anemometers are sometimes mounted on large turbines.

Fig. 11.2. Operational wind measuring system on the nacelle of a Vestas offshore turbine

Taking into account the deficiency in the evaluation of the measured values, measuring the wind speed on the nacelle roof supplies sufficiently accurate results for the operational control of the turbine and, with some reservations, also for checking the power characteristic. For this purpose the free stream wind speed and the wind speed on the nacelle will simultaneously be measured and plotted versus each other. The ratio of the free stream wind speed to the nacelle wind speed can be used for correcting the power curve, if it is measured by the operational wind speed measuring system.

The wind measuring system basically consists of two main components, the sensor and the data processing system. Sensors for the combined measurement of wind speed and direction are available in numerous forms. As a rule, wind speed is recorded by a cup anemometer (Fig. 11.3). Wind direction is determined with the aid of a small wind vane. In most cases, the speed of the cups and the position of the wind vane are scanned opto-electronically.

The measured data are usually processed electronically, especially if the scanning process is also carried out electronically. The signal processing depends on the requirements of the sequence controller. Above all, a suitable determination of mean values is important, as they are used as the switching signal for the yawing system and for cutting-in the turbine. The mean values must be determined in such a way that the signals for cutting-in the rotor and for yawing are input with the correct delay in order to avoid too much cutting-in and -out or yawing. Programmable instruments which are easily adaptable to the characteristics of the turbine and to the peculiarities of the local wind conditions, are very helpful for this purpose.

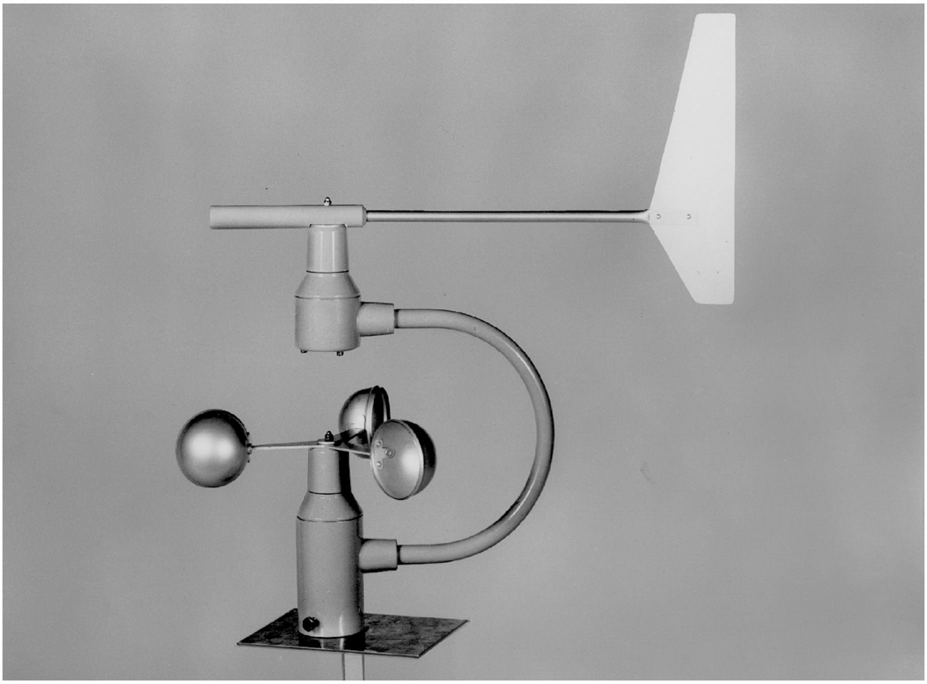

Fig. 11.3. Combined wind sensor for measuring wind speed and direction (Thies)

11.1.2 Measuring Electric Power

In large turbines, power and speed are controlled without directly measuring the wind speed. Attempting to measure the wind speed and to use it as a direct input value for the control system would raise considerable problems. Whatever locality the wind speed is measured at, a value obtained at selected points only will never be representative of the power generated by a large wind rotor which sweeps an area of several thousand square meters. Incorrect reactions of the speed or power control system would be unavoidable. To avoid these problems, it is better to measure the wind speed indirectly via the electric power delivered. The only representative "anemometer" of a wind turbine is the wind rotor itself.

The electric power is measured at the electrical interface between the wind turbine and the grid so that the consumption by the wind turbine itself is already subtracted. This effective power delivered into the grid is the input signal for the power control system. Depending on the position of the power transformer, however, information may be required whether it is the power before or after the transformer which is the reference value.

The power measurement should cover current and voltage for each phase of the three-phase system (Fig. 11.4). The range of measurements should have a bandwidth of 50 to 200 % of the rated power so that power peaks can also be detected [3]. The test instruments include a commercially available three-phase active-power transducer for measuring the power and current transformers for measuring the electric current. According to the IEC, an accuracy class of at least 0.5 is specified for both instruments (s. Chapt. 14.2.2).

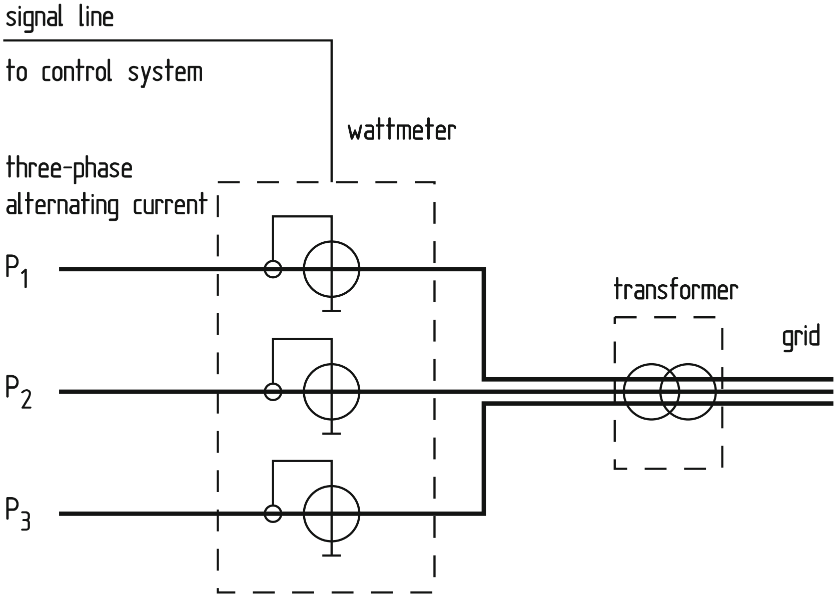

Fig. 11.4. Principle of electric power measurement

11.1.3 Other Input Data

Apart from the main input parameters , wind speed and power output, the optimisation of the control functions requires some more input data, for example :

- rotor rotational speed,
- rotor blade pitch angle.

In the case of a more sophisticated control logic, for example a load dependant individual blade pitch control, further input data are necessary, such as:

- loads on the individual blades or eventually on the rotor shaft,
- azimuth angle of the rotor.

The safety system requires a large amount of data to be sampled by a variety of sensors for measuring excessive vibrations, temperatures in main components, oil level, hydraulic pressures, etc..

11.2 Basic Technology of Controllers

The electronic operation of the control systems is taken for granted today. If they are used at all, mechanically operating control systems are only used in small turbines although here, too, electronics with its great variety of alternatives, will displace mechanical controllers.

The older type of construction is based on a largely decentralised arrangement of the control systems for the individual functional areas. In most cases, the control algorithms were represented as analogue values and hard-wired in corresponding circuit boards. The advantage of the decentralised arrangement of individual analogue controllers is mainly that individual components tried in series production applications can be used, thus limiting the development effort required. However, there are also disadvantages which must not be overlooked. Joining together many components greatly increases the overall installed size and the complexity of the hardware. Moreover, the control characteristics can only be modified by modifying the hardware. Control and operational sequence management systems of this type were typical of the older, large experimental turbines in which the construction of the overall system was primarily based on existing components.

Today, control algorithms are digitally processed in processors (Fig. 11.5). This considerably reduces the demand for hardware and thus lowers the production costs. Changes in the control characteristics only require a change in the software, i.e. the computer programs and the hardware can be used universally. The only disadvantage is here the greater development effort required. This type of construction is "state of the art” in today's series-produced turbines.

The control system can be constructed on the basis of universally applicable *"stored-program controls"* offered by the appropriate suppliers. The wind turbine manufacturerthen "only" needs to develop his own programs. Programming is today matched to the established PC programs and is comparatively simple. However, the large manufacturers such as Enercon and Vestas have for some time switched to completely developing their own control systems. The systems, which are matched precisely to the requirements of their use in the wind turbine, are more compact and more cost-effective in series production. The basic operation of the actual controllers, or of the corresponding control algorithms used in a wind turbine, have characteristics known from general control technology.

In principle, purely proportional feedback *(P controller)* is sufficient for the relatively simple control tasks such as, e.g., for yaw control. However, since this characteristic tends to allow small final deviations from the setpoint value, the controllers are provided with an integral section in the feedback path (*PI controller*). These slowly reduce the final deviation to zero. To achieve a faster control intervention, for example for blade pitch control, a differential section is added (*PID controller*) but a certain delay in the response must then be accepted.

The signals of the various sensors are interrogated by the computer of the control system at the rate of “kilo-Hertz”, so that the system is not dependent on the information provided by individual interpolation values which may be wrong or untypical. The signals from several interpolation values to be processed are averaged and weighted in accordance with the *least squares algorithm*. Advanced data bus systems are an important technology for the data transfer between the decentralised controllers and the main computers of the control system. They become increasingly standardised, so that various components of the control system, delivered by different suppliers, can be integrated in the system (s. Chapt. 11.7).

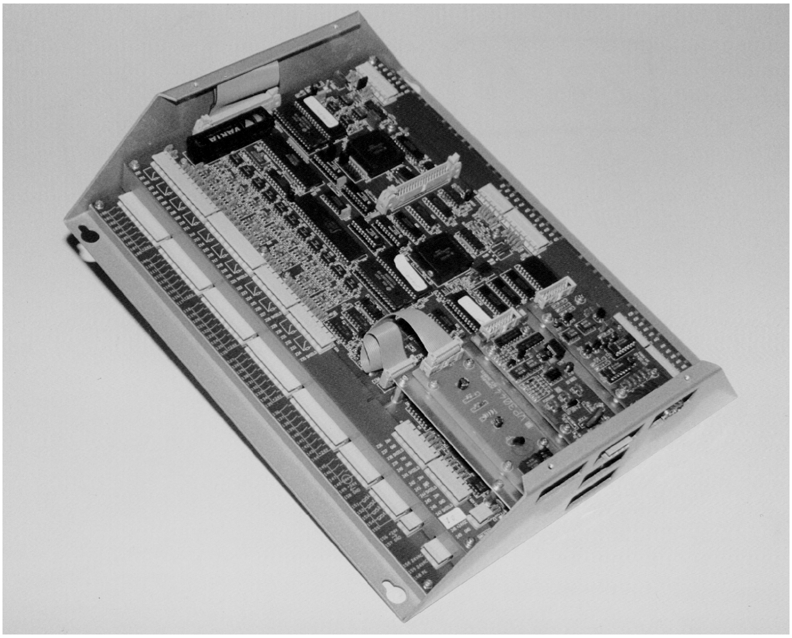

Fig. 11.5. Central control unit for a wind turbine (Mita)

11.3 Yaw Control

Control of the yaw motion is characterised by conflicting aims. On the one hand, the deviation of the rotor from the wind direction, the yaw angle, is supposed to be as small as possible to avoid power loss. On the other hand, the yaw control system must not respond too sensitively, to avoid continuous small yaw movements which would reduce the life of the mechanical components. The problem is to find a practicable compromise as it is not possible to set up a general rule. The solution is determined by turbine-specific properties as well as by the local wind conditions.

The situation relating to the earlier WKA-60 turbine will be given as an example, although it is not necessarily a generally valid model. The wind measuring system of the turbine provides a mean value of the wind direction over a period of ten seconds. This value is compared with the instantaneous azimuth position of the nacelle every two seconds. If the deviation remains below 3 degrees, the yaw control system will not be activated. If the yaw angle determined is above this value, the time until correction is determined in accordance with a pre-programmed function. If the yaw angle is small, for example 10 degrees, yawing is carried out within 60 seconds, if it is greater, e.g. 20 degrees, the yaw is accomplished within the subsequent 20 seconds. If the yaw angle determined exceeds a value of 50 degrees, the rotor is yawed immediately. The operating diagram shows the ranges within which the yaw system works (Fig. 11.6).

Yawing starts at rotor standstill at a wind speed of about 4 m/s, i.e. 1 m/s below cut-in speed. If the wind speed exceeds 36 m/s, the rotor will not be yawed. If extreme yaw angles occur at the non-rotating turbine with such extreme wind speeds, the yaw brakes

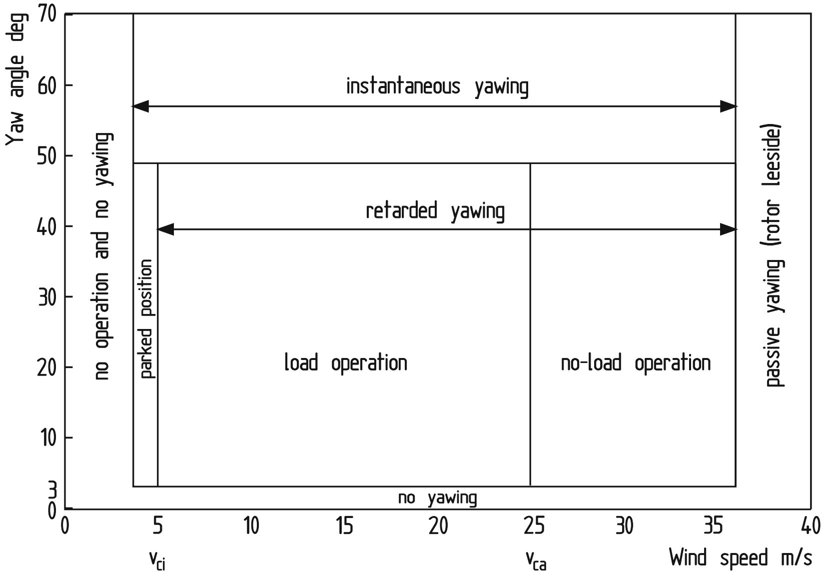

Fig. 11.6. Operating diagram of the WKA-60 yaw system

will slip so that the air forces will passively yaw the leeward rotor. The control system and operational control of the yaw system briefly described on the example of the WKA-60 turbine is typical for a large turbine. In smaller turbines, simpler processes are possible.

Regardless of how the sequence control system of the yaw drive is set up and the control characteristics are determined, temporary deviations of the wind direction from the azimuth angle of the rotor cannot be avoided. An impression of the size of the yaw angles occurring is given by the values plotted in Figure 11.7. The average yaw angle is of the magnitude of approximately 5 degrees. This involves a certain amount of rotor power loss. As this only becomes noticeable in the partial load range, the loss remains within bearable limits at approximately 1 to 2 % of the annual energy yield [4].

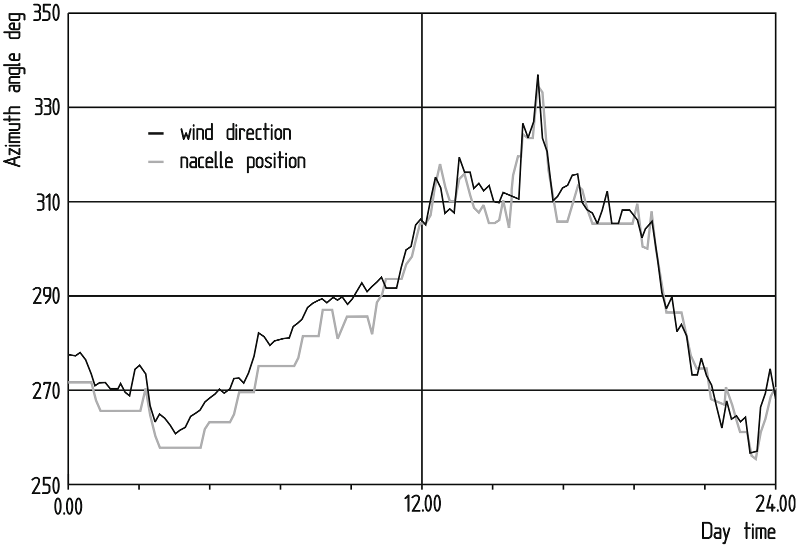

Fig. 11.7. Measured azimuth angle of the nacelle and wind direction during operation of the WKA-60 [4]

Apart from trying to keep the mean yaw angle as small as possible, the yawing rate of the rotor is also determined by taking into consideration the gyroscopic moments. The yawing rate is normally about 0.5 degrees per second. At higher rates, the influence of the gyroscopic moments becomes too great (Chapt. 5.6).

11.4 Power Control with Rotor Blade Pitching

The fundamental problems of power control in a turbine become particularly apparent if the task of control is compared to that of a conventional thermal power station (Fig. 11.8). In a thermal power station, the fuel, or in more general terms the primary energy source, is fed to the steam generator in doses (action A). The steam is then fed into the turbine via an adjustable inlet valve (action B). The turbine drives the electric generator the voltage and reactive power of which can be influenced via the field excitation (action C). Thus, there are three types of control action available to regulate the overall system.

When looking at a wind turbine, it immediately becomes apparent that the first control action, the dosing of the primary energy source, is absent. The "wind turbine" must cope with the random variations of the primary energy source "wind". The primary energy conversion of the rotor can be controlled only by pitching the blades. This control action can be most easily compared with the steam inlet of the turbine. If an appropriate electrical system is used, the generator torque and reactive power can also be controlled in a wind turbine. The main problem with wind turbine control is the fluctuating supply of primary energy. These fluctuations are of greater or lesser significance to the control characteristics depending on the time intervals over which they are effective.

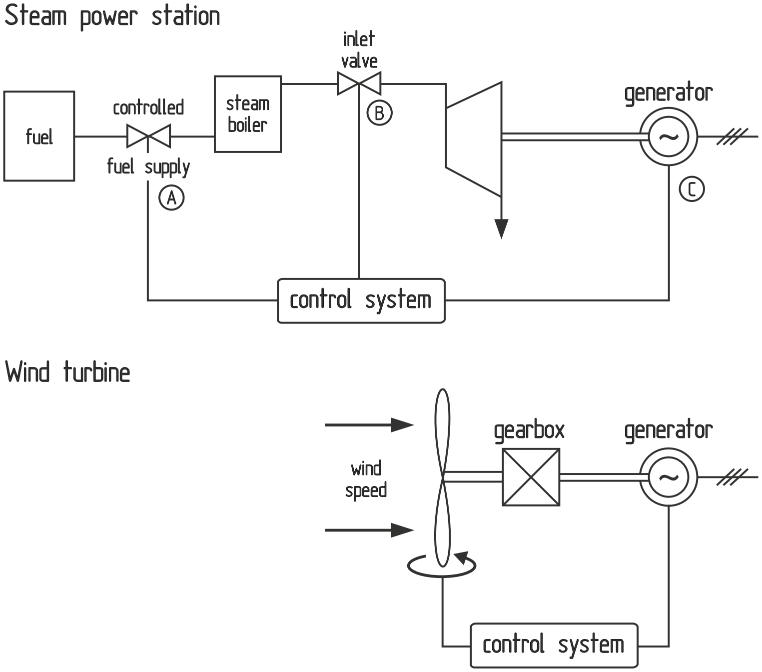

Fig. 11.8. Comparison of the control task in a thermal power station and in a wind turbine [1]

Due to the mass inertia of the rotor blades and actuating elements, extremely brief fluctuations (wind turbulence and gusts) of less than a second cannot be responded to by the blade pitch control. As the control system cannot respond within these periods of time, the resultant loads must be borne by the turbine and the ensuing power fluctuations accepted.

Changes in wind speed within a range of "several-seconds" can be responded to by the control system. This is where the real task of the control system lies. The control system of the turbine can respond with the aid of the two control variables "blade pitch" and, possibly, "generator torque".

The power control system cannot respond to longer-term variations in wind speed. In the minute range, they influence the operational sequence of the turbine. Even longer-term fluctuations, over hours up to seasonal changes, pose questions of availability or lead to the problem of energy storage.

With the two control variables of "blade pitch" and, in most larger turbines, the "generator torque", two reference variables of wind turbine operation can be regulated: "rotor speed" and "power output". Speed control becomes indispensable when the speed is not maintained by the grid frequency. This is always the case in isolated operation. But speed control is also necessary in parallel-grid operation of turbines during start-up or when shutting down and in generators with no direct connection to the grid.

Power control is required for limiting the power output of the wind turbine to the rated power and to reduce the power in the case that the capacity of the grid is limited.

Large turbines are, therefore, equipped with a combined speed/power control system. The interaction of speed and power control, the control structure, is determined by the type of generator system and by the desired operational sequence.

11.4.1 System Characteristics and Analytical Design Methods

The control structure of a turbine must be matched to the electrical-mechanical energy conversion chain. Within this chain, five areas can be distinguished which can be understood to be controlled subsystems of the overall control structure (Fig. 11.9).

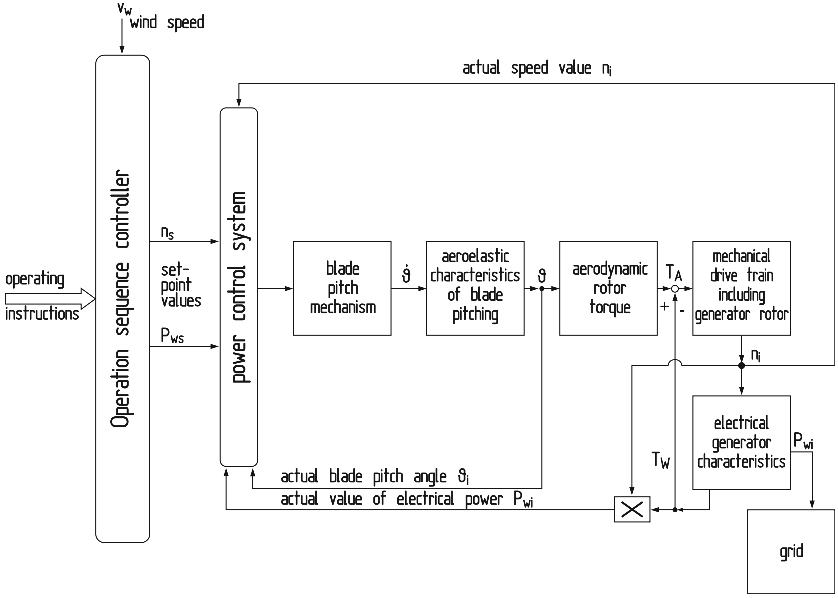

Fig. 11.9. Principle of the power and speed control structure of a wind turbine with the essential controlled members and control loops [1]

The following main areas of "controlled systems" can be defined. Their characteristics are dominating the design of the control system:

- aerodynamic power and torque of the rotor
- dynamic characteristics of the blade pitch mechanism
- aeroelastics of blade pitching
- dynamics of the mechanical drive train
- electrical characteristics of the generator.

If operating conditions are difficult, in isolated operation or operation on a weak grid, the characteristics of the grid and sometimes of the generator loads must be added to these.

Aerodynamic rotor torque

The torque of the rotor depends on the wind speed and the pitch angle of the rotor blades as actuating variable. The steady-state characteristics of this "controlled system" form the family of power characteristics of the rotor and the family of torque characteristics (Chapt. 5.2). Considering the control system, it should be remembered again that the aerodynamic rotor concept, as it is reflected in the power or torque characteristics, has a direct influence on control response. Non-stationary effects during the build-up of the aerodynamic rotor torque may also have to be considered. Apart from the changing wind speed, these can occur when the blade pitching rates are relatively high.

The power and torque characteristics of the rotor, calculated in a steady state (c_p-λ and c_m-λ characteristics) also form the basis for the mathematical simulation of the control system (s.a. Chapt. 5). Non-linear dependences of the c_p and c_m values on the wind speed or the blade pitch angle and the rotor speed, respectively, must be linearised in certain part-sections.

Pitch control dynamics

The magnitude of the pitching moment around the longitudinal axis of the blade, which must be provided by the blade pitch mechanism, is determined by a complex interaction of forces and moments. Apart from the torsional moments resulting from the mass inertia of the blades and the friction in the blade bearings, it is the aerodynamic moments, above all, which become effective to greatly varying degrees depending on the operating conditions. Wind speed, the aerodynamic angle of attack and rotor speed affect these aerodynamic moments to an extraordinary degree.

The forces and moments caused by aeroelasticity have an influence on the control response which is not to be underestimated. The bending of the rotor blades is almost always accompanied by a torsional movement, so that elastic deformations of the rotor blades have a direct influence on the aerodynamic angle of attack. Slender and thus in most cases also flexible rotor blades might be advantageous from the viewpoint of aerodynamic performance, but from a control point of view they are difficult to govern. On closer inspection, difficulties concerning the control system of a turbine frequently turn out to be problems of "controllability", especially with regard to the aeroelasticity of the rotor blades.

Blade pitch mechanism

The blade pitch system for adjusting the blade pitch angle is actually an actuating element, but, due to its complex mechanics, it is also the first controlled system, the physical properties of which are of considerable significance for the control response. The control-related properties differ greatly, depending on the design principle. An electromechanical actuator differs distinctly from the various hydraulic blade pitch mechanisms with regard to its mechanical inertia and its elastic damping properties. It's therefore not possible to make general statements on the control characteristics of the blade pitching mechanism.

In most cases, the pitch control dynamics can also be described by means of a linearised model. The mechanical model of the drive train can be formed independently of that. Any coupling with the pitch control dynamics becomes relevant only when extraordinary drive train vibrations are triggered.

Dynamics of the mechanical drive train

The aerodynamic torque delivered by the rotor is opposed by the moment of resistance of the electric generator. Between these, there is the mechanical drive train. The inertia of these rotating masses, including the generator rotor, the stiffness and the damping characteristics, and also the play in the gearbox and couplings, all affect the dynamics of the drive train and must thus be considered as a controlled subsection. Chapter 7.2 discusses the essential parameters from the point of view of vibrational behaviour. Treating the problem from a control engineering point of view permits simplifications.

Electrical characteristics of the generator

The end point of the chain of controlled systems is the electrical part of the generator, which generates the moment of resistance. Each type of generator has different torque characteristics which must be adapted to the control structure of the wind turbine. It is important for the design of the control systems that the electrical processes leading to the formation of the moment of resistance in the generator occur by orders of magnitude more quickly than the mechanical control processes of the blade pitching. Internal generator control can, therefore, be considered independently. Within the context of the overall control structure, the characteristics of the moment of resistance of the generator, similar to the rotor characteristics, appear as a stationary curve or, in complicated generator systems, as a family of curves. The characteristics of the generator are of special significance for the control structure to be selected.

Developing a complete simulation model for controlling a wind turbine is not a simple task. The problem of linearisation in the area of aerodynamics and electromechanics alone, without which closed mechanical relationships cannot be formulated, requires a great deal of experience. With respect to forming an aerodynamic model this means, for example, that the model loses its validity as it approaches stall. This so-called “post-stall behaviour” must, therefore, be dealt with separately if it is estimated to be critical.

11.4.2 Fixed-Speed Generators Directly Coupled to the Grid

From the point of view of control, the operation of a wind turbine on a fixed-frequency grid represents the simplest case. In load operation the speed of the electric generator, and hence of the rotor, is determined by the fixed grid frequency, if the generator is directly electrically coupled with its stator winding to the grid. With respect to a wind turbine, the interconnected transmission systems of the public utilities are generally to be considered as having a "fixed frequency". At most feed-in points of the grid, the load changes caused by a turbine feeding into the grid are too small to exert a measurable influence on the frequency, compared with the total load of a large grid. The situation can be different on weak spur lines.

The technical preconditions for parallel-grid operation differ depending on the type of generator installed. These differences are more important, as the practical application is not solely restricted to the synchronised operation on the grid, but also includes other operating modes such as start-up, synchronisation with the grid frequency and rotor braking.

Induction generator

For turbines with blade pitch control, the use of induction generators simplifies the task of controlling. The - albeit slight - power-dependent speed "elasticity" due to generator slip allows speed and power control to be combined. In the typical control structure shown in Figure 11.10, the controllers are arranged separately such that the speed controller has a limiting effect on the output of the power controller.

In normal operation, the nominal speed is set several percent higher than the corresponding value of the grid frequency. Apart from start-up and shut-down sequences, the speed control only intervenes in cases of trouble (for example a grid failure). The speed setpoint value can be varied for start-up and shut-down and for preparing for grid synchronisation.

The arrangement shown enables the speed controller to be adjusted to idling and the power controller to be adjusted to grid operation. A secondary blade pitching-rate controller is also included in the blade-pitch control, to improve its stability and dynamic range. This means that the pitching-rate is regulated by the setpoint values of the nominal rotor speed in dependence on the gradient of the measured deviation. Allowing for this parameter results in softer blade pitching, a desirable feature in large turbines.

Recording the actual value of the blade pitch angle and the pitching rate requires the transmission of a signal from the rotating rotor. If the two inner control loops are omitted, the power controller then directly acts on the pitch mechanism and no pitch angle information is required. This simple structure provides a sufficiently stable control

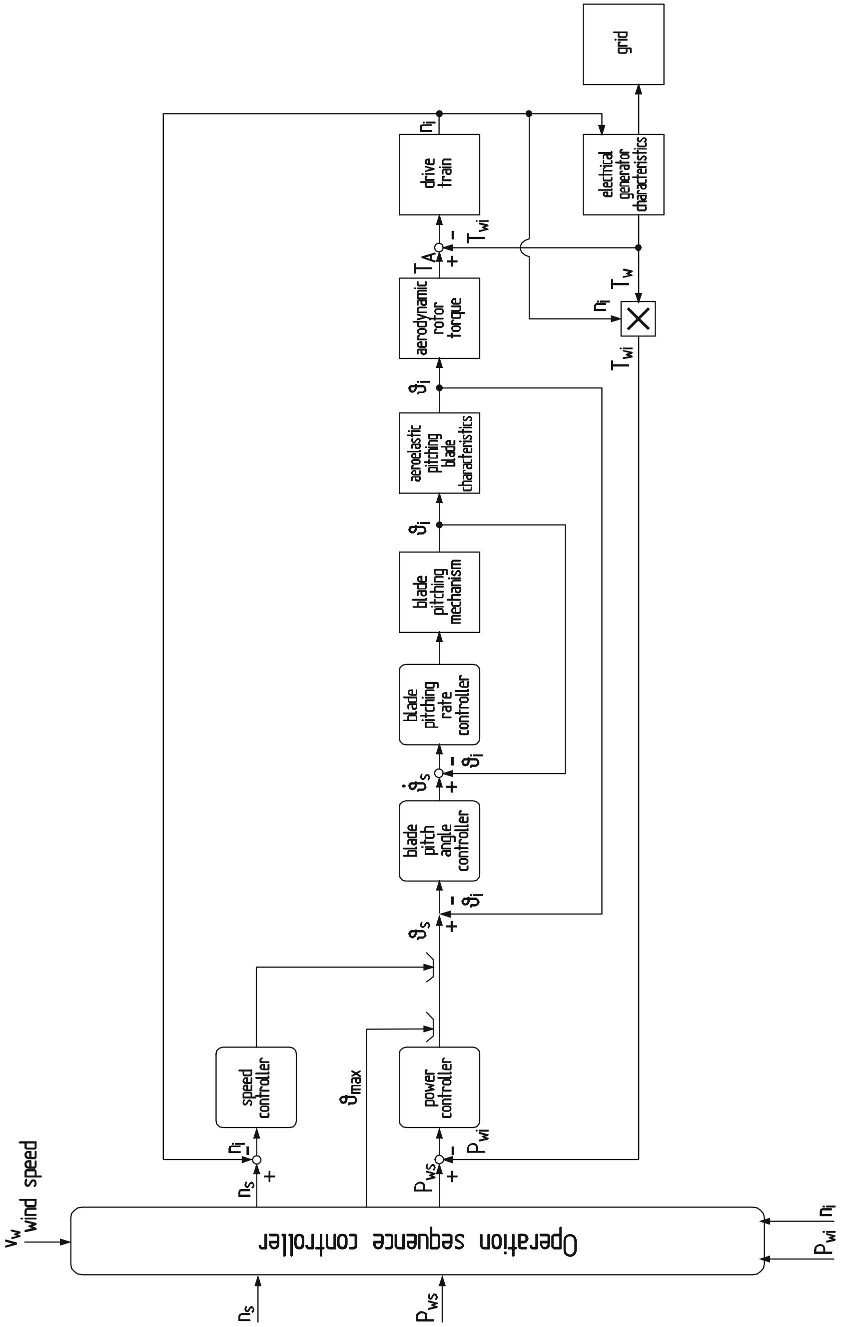

Fig. 11.10. Control structure of a large turbine with a directly grid-coupled induction generator [1]

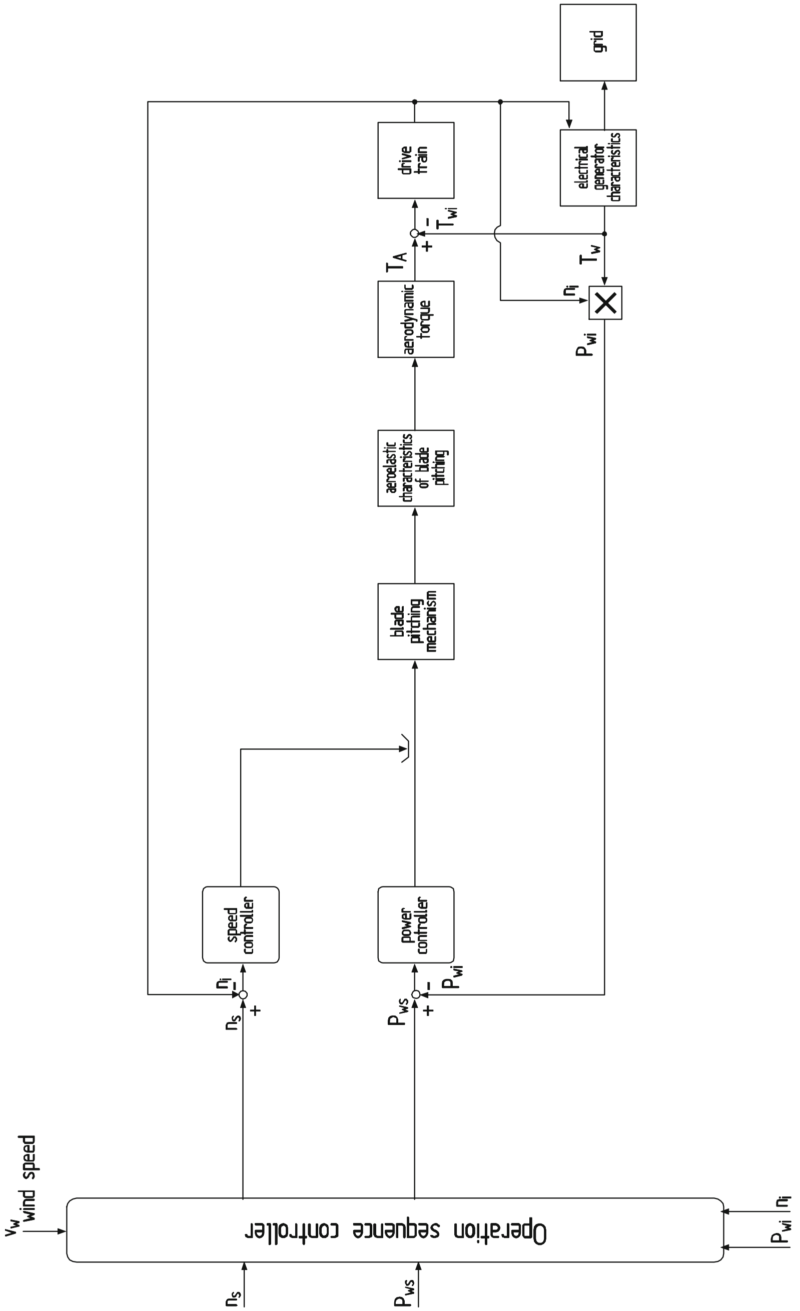

Fig. 11.11. Simplified control structure of the small Aeroman turbine with an induction generator directly coupled to the grid without acquisition of the actual blade-pitch angle and without pitching rate control

response even though the adjustment of the controllers is not without problems as far as the stability over the entire range of wind speeds is concerned. Power instabilities can occur, particularly at higher wind speeds. For smaller turbines, however, this simplified structure is often sufficient (Fig. 11.11).

Synchronous generator

When synchronous generators are used, the dynamic behaviour is determined by the speed coupling to the grid frequency being absolutely fixed. The energy captured from the wind must be processed directly by the generator and creates a certain load angle depending on the state of excitation. If the load angle exceeds its maximum value of approximately 90 degrees, the generator loses synchronisation and must be taken off the grid. Moreover, the undamped characteristic of the synchronous generator means that the system's potential for vibration can become a problem.

For reasons of stability, therefore, it must be ensured that in the stationary condition, the mechanical driving torque of the generator has a large enough safety margin with respect to the electrical pull-out torque. In addition, the pull-out torque can be increased by increasing the excitation voltage, thus also improving the stability. At least for large turbines, voltage and reactive power control makes technical sense and may even be necessary. The control structure of a wind turbine with a synchronous generator, meeting the requirements of direct grid coupling as well as of isolated operation, is shown in Figure 11.12.

The upper section of the diagram shows the speed and active-power control with the blade pitch angle as actuating variable. The lower section shows the current or reactive power control with the excitation voltage as actuating variable. As the control processes in the electrical system occur much faster than the mechanical actuating movements, the two control systems can be considered as being largely decoupled as far as the dynamics are concerned.

The entire structure for speed and active-power output control consists of a speed control loop, with secondary control loops for active-power output, blade pitch and pitching rate. The speed controller with a nominal speed n_s which lies several percent above the grid frequency f_N, is only used in isolated operation.

When operated on the grid, the generator frequency is controlled by the grid, the actual speed n_i remains constant and, because $n_i < n_s$ is maintained, the output of the integrating speed controller tends towards the upper limit. This corresponds to the required maximum active-power output P_{WS}, preset by the sequence controller as reference value, and is maintained by the blade pitch system if the wind speed is high enough. If the wind speed is not high enough, the set point value of the pitch angle is set to the selected constant blade pitch angle for partial load operation. During idling, i.e. without the rotor speed being governed by the grid frequency, the turbine accelerates up to the n_s speed and the speed controller also becomes active. By inserting reactive current compensation, a power output coupled to the grid frequency can be obtained which corresponds to normal power station control.

Despite the critical stability properties of the synchronous generator in parallel-grid operation, it is technically feasible to control a wind turbine with a synchronous

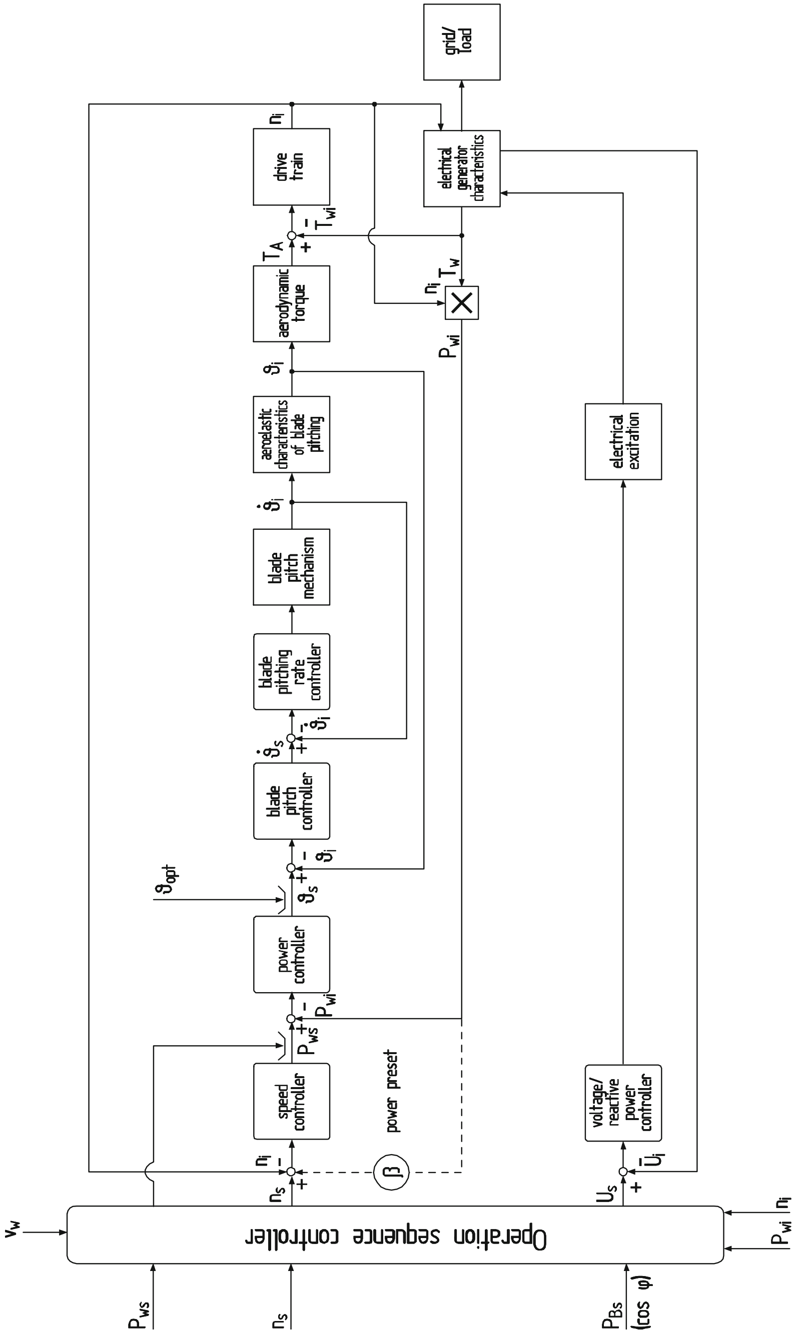

Fig. 11.12. Control structure of a large turbine with synchronous generator for parallel grid and isolated operation [1]

generator operating on a fixed frequency grid. The prerequisite for this is, however, the presence of torsional compliance and damping in the mechanical drive train (s. Chapt. 9.9). Recent research projects suggest improving the critical vibrational behaviour by means of a special damper winding in the synchronous generator [5]. Regardless of these possibilities, coupling a synchronous generator for wind turbines directly to the grid is no longer "state of the art" (s. Chapt. 10.3.1). Today synchronous generators are connected to the grid by means of a frequency inverter.

11.4.3 Variable-Speed Operation with Frequency Converter

Inserting a frequency converter between the generator and the grid enables the rotor to be operated with variable speed. Apart from the aerodynamic advantages, it reduces the dynamic loads on the mechanical drive train and acts to smooth out the electrical output power (s. Chapt. 6.6.4 and 14.4.4). From the point of view of control, the wind turbine thus has two actuating control variables:

- blade pitch angle for controlling the aerodynamically captured power of the rotor,
- generator torque for varying the electrical output power independently of rotor speed,
- variation of the rotor speed of rotation.

On the aerodynamic side, coarse power control is carried out by controlling the pitch angle, whereas small variations are taken care of by the electrical control, but only within the limits of the permissible speed range. This relieves the mechanical pitching mechanism. These actuating variables make the instantaneous electrical power output independent of the aerodynamically captured rotor power.

In principle, the control structure according to Figure 11.13 can be applied to all variable speed generator systems in the form shown. There are, of course, some variations in detail, depending on whether a synchronous generator with an AC-DC-AC link to the grid or a double-fed induction generator is involved.

In full load operation the pitch control is active, so that rotational speed and power can be adjusted to the set point values. The speed controller can be provided with a range of insensitivity to reduce the number of pitching operations. At partial load, the power output and rotor speed are controlled exclusively by varying the generator torque. There are no further control operations via the blade pitch angle available. When the wind speed drops, rotor speed is reduced in order to maintain the optimal tip-speed ratio of the rotor. Variable-speed rotor operation in the partial-load range presents the problem of having to control the rotor speed in dependence on the wind speed in such a way that the optimal rotor power coefficient is achieved. Since for this purpose, too, using a measured wind speed as input variable presents great problems, the rotational speed is controlled on the basis of a predetermined torque/speed characteristic based on the family of torque curves of the rotor (Fig. 11.14).

In principle, other control strategies are also possible in the part-load range, for example the so-called "MPPT" (Maximum Point Power Tracking) process which has also been applied in other systems, where the point to which the power maximum is to be set is determined by incremental speed variation, in the form of a search process.

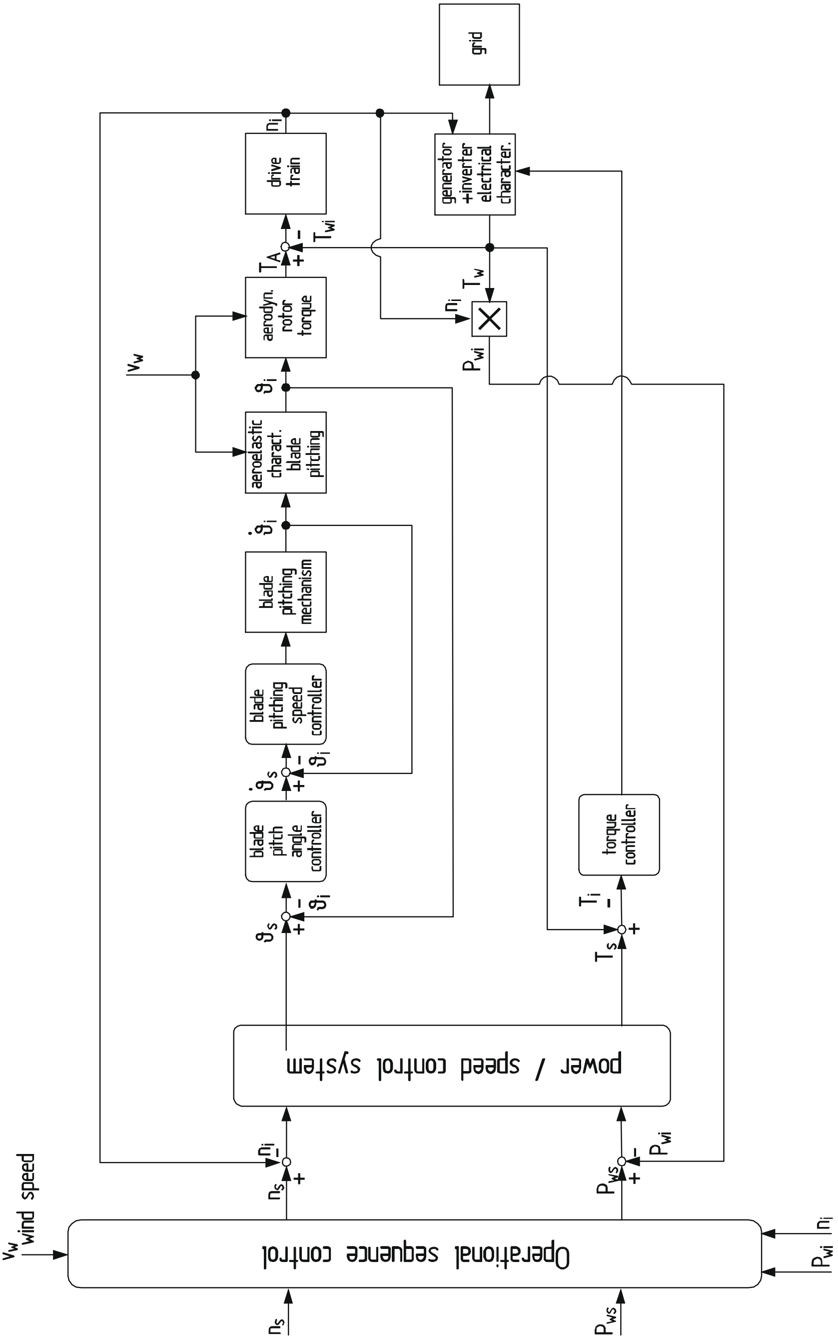

Fig. 11.13. Control structure of a wind turbine with variable-speed generator and frequency converter [1]

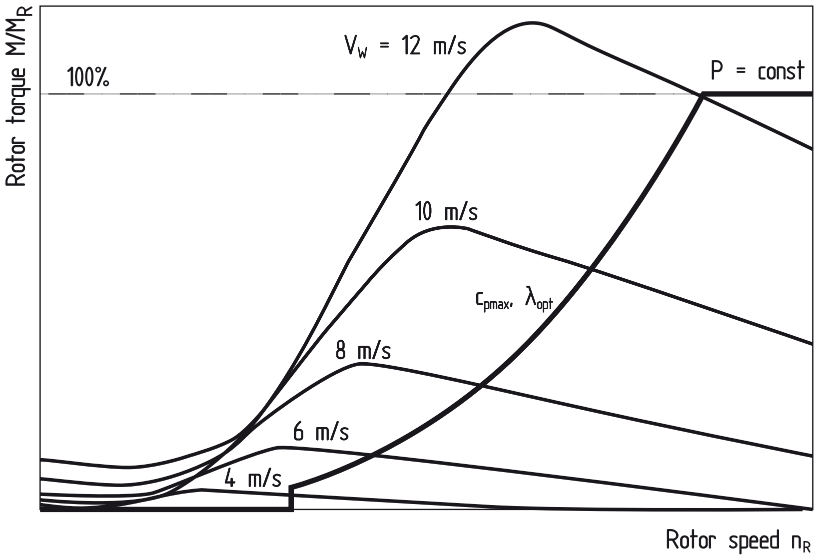

Fig. 11.14. Characteristic for the wind-oriented operation in the torque/speed map of the rotor [6]

It has been attempted in some turbines to control the rotor power solely by means of rotor speed, i.e. via the generator torque of a variable speed generator system, but the aerodynamically captured rotor power can only be regulated by this means within a much narrower range than is possible with pitch angle control. In principle, this method is an option for rotors without blade pitch adjustment. Present experience has shown that a practical implementation with respect to stable control characteristics encounters considerable problems. It is not really possible to achieve satisfactory power limiting by means of aerodynamic stall with a variable rotor speed.

11.4.4 Isolated Operation without Grid

The control issues of wind turbines in isolated operation without a stable electric grid are not yet developed to a mature status. As outlined in Chapter 16.1 there are only more or less experimental installations on the basis of small wind turbines. The enormous success of large grid-connected turbines has focussed the technical progress on this kind of application. The control of small wind turbines in isolated operation therefore can be only discussed from a basic point of view.

The isolated operation of a wind turbine has an energy supply aspect and a control aspect (Chapt. 16.2). From the control point of view, isolated operation can be defined as the mirror image of parallel-grid operation, as follows:

- The possibility of speed control of the generator by a fixed-frequency grid is not available.
- The instantaneous power output of the turbine is no longer arbitrary, but must be seen and controlled in relation to the instantaneous power consumption of the generator load.

In real-life operation these conditions will apply to a greater or lesser extent. Instead of completely isolated operation, there will be in many cases a "weak grid". The turbine will then have to "keep up with" the grid frequency and to adapt its power output to certain load conditions of the grid. Speed control via blade pitching is possible only if the power supplied by the wind is greater than the power taken by the generator load. In isolated operation two areas of operation must therefore be distinguished:

- If the energy supplied by the wind is greater than the power demanded by the load (full-load operation), speed and power consumption can be adapted and controlled by changing the blade pitch angle.
- If the wind energy is less than the power demanded by the load (partial load operation), the rotor is usually operated with a fixed blade pitch angle. It must then be ensured that the energy taken by the load is reduced accordingly. This has to be done by a "load management" system by which the loads to be supplied are cut in or out of the supply.

A rough, but effective load management can be organized well if several loads are connected and can be distributed over a number of load circuits (Fig. 11.15). These loads are cut in or out in accordance with pre-determined priorities in dependence on the frequency. In combination with the faster blade pitch control, this results in a quality of supply which is also satisfactory for the more demanding loads, in electrical terms [7].

In autonomous, isolated operation, the electrical equipment of a turbine will generally have a synchronous generator since it is difficult to provide the exciter current for an induction machine. In the case that an induction generator is used, the reactive power has to be provided by capacitors. The reactive power depends on the frequency and the voltage, thus the usable rotational speed range becomes small. Several stepped capacitors require more control equipment.

Apart from the general possibilities discussed here, isolated operation with small turbines exhibits a number of the most varied special control features depending on the requirements of the loads connected. Examples of this would be the use of wind turbines for heating applications or for driving electric water pumps. These applications do not require a constant frequency, so that control will be simplified in this respect. Instead, the operating characteristics of the loads (power consumption or torque characteristics as a function of rotational speed) must be taken into consideration in the control of the turbine. Under these conditions, the design of the control system must be individually matched to the overall system “wind turbine with power consumer”. It should be noted, that the interaction of the varying load with the varying power output of the turbine caused by unsteady wind conditions can lead to considerable power losses if the control is not optimal.

Variable-speed operation of a generator with downstream frequency converter offers the best control conditions also for isolated operation. They can be used in combination with synchronous and induction generators. In the latter case the inverter provides the reactive power. However, isolated operation requires the use of a line-independent self-commutated frequency converter yet being much more expensive than a line-commutated version.

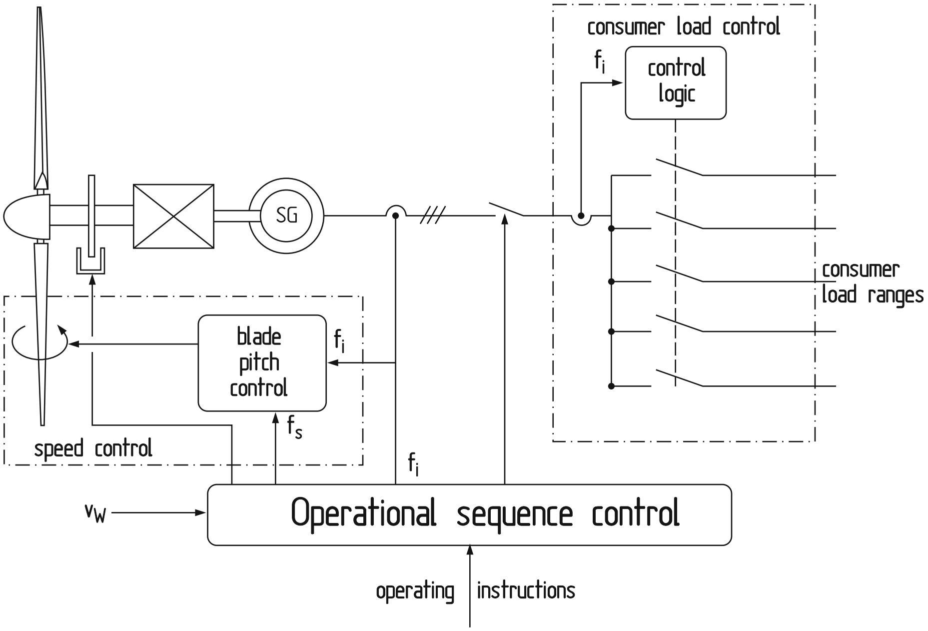

Fig. 11.15. Control and load management of a wind turbine with blade pitch control in isolated operation

11.5 Power Limiting by Aerodynamic Stall

Many smaller turbines do without pitch angle control. Without blade pitching, the possibilities of control are very restricted. If a suitable generator system is chosen, the requirements of parallel-grid operation can be met without great difficulty but isolated operation without blade pitch control is a much more difficult task. The fact that wind turbines without blade pitch control do not have an active speed or power control should not lead to the conclusion that all types of control technology are superfluous. Even in parallel-grid operation the operational sequence, the supervision of important functions such as the triggering of safety systems and the synchronization with the grid require a considerable complexity of electronic system control components.

11.5.1 Parallel-Grid Operation

Operation on the grid is the main field of application for turbines without blade pitch control. As a rule, the smaller turbines have a rotor with fixed blade pitch angle and aerodynamic blade tip brakes. An active speed/power control system is not required for parallel-grid operation (Fig. 11.16).

The operational sequence control is restricted to yawing and to the switching signals for controlling the operational sequence in dependence on the wind speed and the operational status of the turbine. If there is enough wind, the mechanical rotor brake is released and the rotor accelerates to the synchronous speed. The automatic synchronizing system connects the generator to the grid and operation under load commences. If the wind speed exceeds the permissible maximum operating value, the rotor is retarded mechanically and, in most cases, simultaneously turned out of the wind (furled). The turbine can survive extreme wind speeds in this position. In case of a grid failure, rotor overspeed will be prevented by releasing the aerodynamic brakes or pitching the rotor blades (s. Chapt. 7.7). Apart from controlling the operating cycle described, another task of the sequence controller is the monitoring of safety-related electrical and mechanical parameters such as grid voltage and frequency, generator and gearbox oil temperatures, or unacceptable amplitudes of vibration (s. Chapt. 14.6).

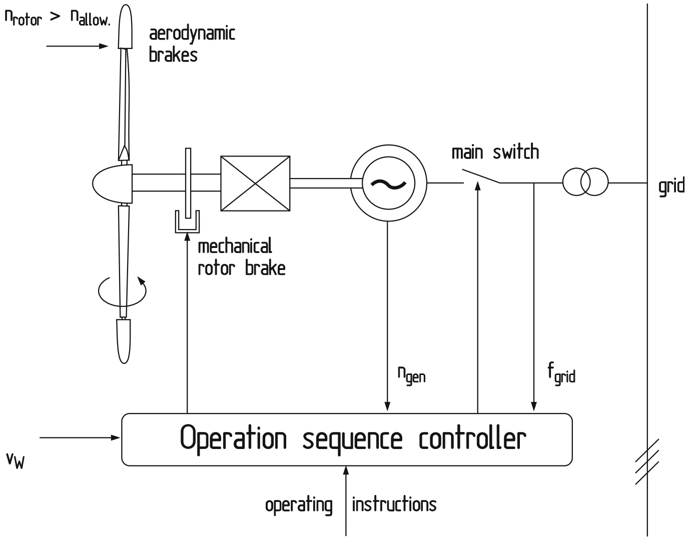

Fig. 11.16. Operational sequence control and supervisory system of a wind turbine without pitch control on the grid

11.5.2 Isolated Operation

With some technical effort, wind turbines without blade pitch control are also capable of isolated operation. As the power capture of the rotor cannot be controlled, speed or frequency control can only be achieved by changing the generator load. As far as possible, the connected loads are connected to different load circuits for this purpose. However, these load circuits, as switchable load stages, are generally not enough for speed control, so that additional regulating resistors are necessary. Control with a high degree of constancy of frequency requires fast and accurate matching of the load to the wind power fluctuations. This requirement is met by tapped, quickly switched resistors ("dump loads"). Semi-conductor switching elements are preferred due to the high switching frequencies (Fig. 11.17). If operating conditions in which the load circuits cannot also be used for control purposes, the dump loads must be designed for the maximum power output of the wind turbine.

In principle, using a frequency converter expands the control capabilities also in conjunction with stall-controlled turbines. Apart from the high costs of a self-commutated frequency converter, however, the implementation is impeded by the aforementioned technical problems. The necessity of limiting the speed range over controllable loads remains. In isolated operation, variable-speed operation in conjunction with load limiting by means of aerodynamic stall becomes even more complex because the appropriate rotor speed has to be matched to the stall characteristics of the rotor. It is for these reasons, among others, that no successful applications have become known to the present.

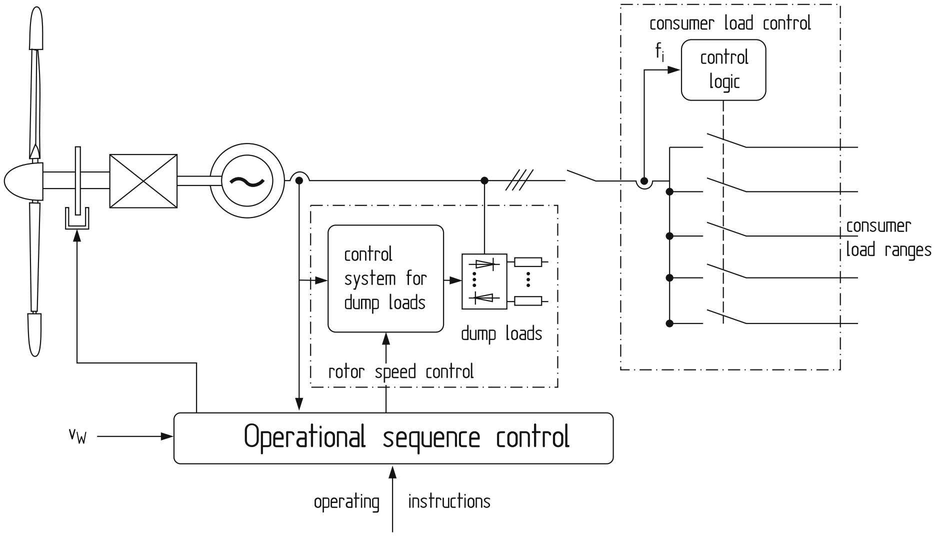

Fig. 11.17. Frequency control by load management and dump loads for a wind turbine with fixed-pitch angle in isolated operation [7]

11.5.3 Active Stall Control

In the case of rotors having a so-called *active stall control*, various, but fixed blade pitch angles are operationally set in order to ensure that the desired flow separation will occur at the rotor blades under the respective prevailing environmental conditions (s.a. Chapt. 5.3.3). The pitch angle is set in dependence on various input variables:

- wind velocity
- temperature (air density)
- installed altitude above sea level (air density)
- state of the rotor blades (soiling).

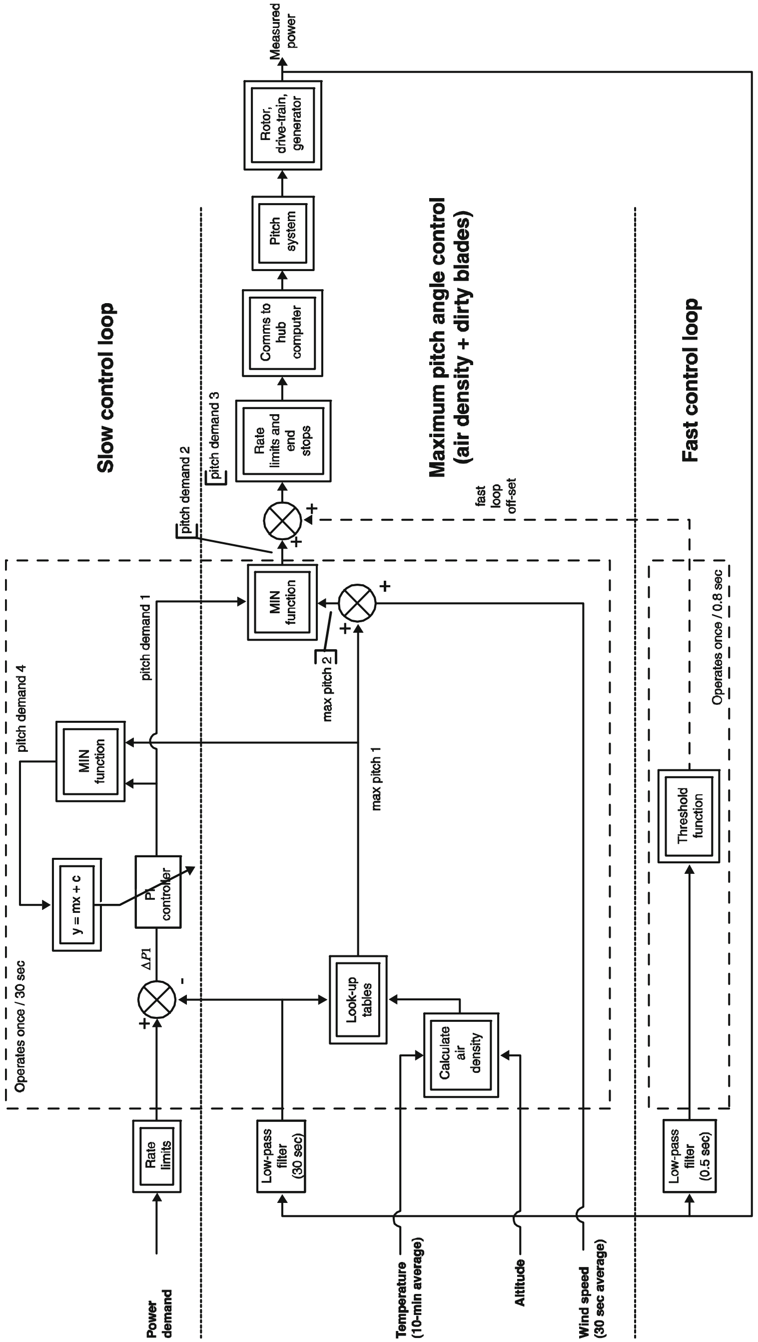

Fig. 11.18. Scheme of active stall control (courtesy NEG MICON)

The blade pitch angle remains at these positions and the power is controlled by flow separation at the rotor blades, the stall. There is no closed-loop control for the power output but nevertheless the term “control” is used in this case like for all “stall-controlled” rotors. In practice, an active stall control system leads to relatively complex structures as can be seen clearly in the diagram (Fig. 11.18).

- A “slow" control loop is used at wind velocities above the rated wind velocity (15m/s) for measuring the mean power over a period of 30 seconds and adjusting the blade pitch angle in such a manner that the 10-minute mean of the rated power is kept at 1500 kW.
- A further control loop can be used for adjusting the blade pitch angle with a higher rate of adjustment as a direct response to the 30-second mean if this is required. In this control loop, the influence of the air density and of the rotor blade soiling (mainly in summer) is input directly.
- A third, "fast" control loop is provided for an emergency stop of the turbine. The blade pitch angle is adjusted in the direction of the stop position at a rate of 3 degrees/second on the basis of an o.5-second mean value of the power if this exceeds the value of 1.27-times the rated power.

Lastly, the above-mentioned input parameters are taken into consideration in all three control loops. This control structure obviously departs from the original simplicity of the stall principle, at least in the example presented here. However, the advocates of this principle point to some advantages such as that, in particular, the rotor blade pitch angle is kept close to the stall position over the entire wind speed range so that only very small pitch angle changes are necessary (Fig. 11.19). Even aerodynamic braking only requires an adjustment by approx. 20 degrees (s. Chapt. 5.3.3).

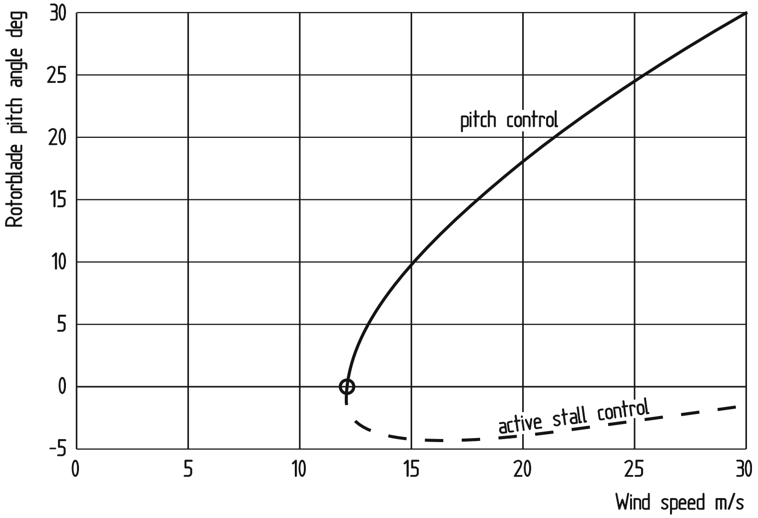

Fig. 11.19. Blade pitch angle adjustment range for power control with conventional blade pitch angle control and with active stall control

11.6 Operational Sequence and Safety System

The task of the operational sequence control system of a wind turbine is to bring the wind turbine from one operational state to another. It must permit fully automatic operation, it must recognize hazards and activate the safety systems and it must be able to execute special instructions by the operator. In this respect it acts as replacement for the non-existent operating personnel. In this context, the "safety system" assumes a special position. It operates autonomously which is why, strictly speaking, it is not a part of the operational sequence control system. These tasks require an all-system data acquisition, and supervisory system with numerous contact points to almost all components of the turbine itself and its peripheral technical systems. The most important subtasks can be described as follows:

- Acquisition of the input data necessary for controlling the operating sequence. This includes wind speed and wind direction and sometimes also information on the state of the grid to be fed, for example the currently allowed power input into the grid or the connection of different loads (load management).
- Control of the operating sequence in automatic mode, and manual operation for special cases, i.e. maintenance work.
- Activation of the safety and emergency systems. The emergency shut-down of the rotor is of primary importance here. The sequence controller should guarantee that these "ultimate" safety mechanisms act as directly as possible, without the electronic control system.
- Adaptation to the operating conditions. Not least, the operation management of a turbine should have a certain margin for adapting to various operating conditions. In parallel-grid operation, e.g., different requirements must be met than in isolated operation.

Naturally, the technical complexity of the sequence control and supervisory system depends to a certain extent on the size and the technical concept of the turbine. A small wind turbine with a simple induction generator for parallel-grid operation cannot be compared to a variable-speed large megawatt turbine as far as operational control is concerned. This is especially true for the operating and monitoring instruments. However, the operating cycle is similar in all wind turbines.

11.6.1 Operational States

As part of the operational sequence control, various "operational states" are defined which are characterized by predetermined parameters. “Power production” and “standstill” are stationary states, the others are transition phases from one state to another. The supervisory system checks wether all predetermined parameters are reached. If not, the shut-down is initiated. In the structure of the automatic operating sequence ("operating cycle"), the following operational states are generally distinguished:

System check

The operating cycle begins with checking the operational status of the most important systems and components. In large turbines a great number of parameters like voltage, temperature and pressure values are checked. Also the grid status has to be verified before the turbine will start. If no faults are indicated in the "system check" state, a signal will indicate that the turbine is ready for further progress in the operational cycle.

Standstill

If the system check was positive, the yaw system is activated, the rotor still being braked. The turbine is yawed to the wind direction within the permissible limits and it is checked whether the wind speed is within the operating range of 5 to 25 m/s, for example.

Start-up

Start-up begins with pitching of the rotor blades into the starting position (blade-pitch angle approximately 60 degrees). Following this, the mechanical rotor brake is released. The rotor starts to turn.

Running up to rated speed

When running up to nominal speed, the rotor speed is accelerated up to the synchronization speed of the generator, corresponding to 90 % of the nominal speed. The blade pitch angle is controlled in accordance with a preset speed variation. Synchronization of the generator with the grid frequency occurs within the speed range of from 85 % to 95 % of the nominal speed.

Power production

Once the connection of the generator to the grid has been established, the turbine begins to output power into the grid. Depending on the existing wind speed, a distinction is made between partial and full load.

The turbine operates at partial load if the wind speed is below the rated value usually 12 to 15 m/s. Under these conditions, the pitch angle of the blades is set to a fixed value in the simplest way. As much power is extracted from the wind as is possible on the basis of the rotor power characteristics at the fixed blade pitch angle set, which is close to the optimum for this range of wind speeds (Chapt. 14.1.1). More recent control systems operate with a number of blade pitch angles at partial load.

If the wind speed exceeds its rated value, the turbine can operate with full power. The blade pitch angle is then controlled in such a manner that the rated power, which at the same time is the highest permissible continuous output of the generator, is not exceeded. The transitions between partial load and full load operation and the associated other control undertakings are performed automatically by the sequence control and do not require any intervention from outside.

Shut-down

If the wind speed drops below the minimum operational wind speed (cut-out wind speed) or if operation under load is to be interrupted, the rotor will be brought to the "standstill position" again. During the shut-down process, the rotor blade is pitched in order to achieve a defined speed decrease. The generator must be taken off the grid which takes place within the range of 92 % to 90 % of the rated speed.

Standstill position

If the wind speed is no longer sufficient for maintaining operation or if the operation is to be interrupted for a relatively long time, the turbine is returned to its standstill position. Rotor standstill is achieved by setting the speed set point value to zero. The rotor blades are pitched to an angle of approximately 80 to 90 degrees. This breaks the rotor aerodynamically down to a low residual idling speed. Complete standstill is achieved by applying the mechanical rotor brake. After reaching the "standstill" condition, the turbine is ready for a new operating cycle.

The operating cycle described cannot claim to be representative in detail. The sequence of the operating cycle is simpler in smaller turbines. However, the essential operating phases and sequences are similar as long as the turbines have blade pitch control. Even simpler, of course, is the operating cycle in the case of rotors having a fixed pitch angle.

11.6.2 Safety System

The safety system, which operates independently of the control system and operational sequence control, gathers a multiplicity of data which relate both to the operational state of the turbine and to status signals of certain components. The most important data are:

- rotor overspeed,
- excessive generator power or torque,
- unusual vibrations in critical components,
- exceeding of permissible operating temperatures of critical components (e.g. gearbox and generator),
- limit values of electrical values associated with feeding into the grid,
- malfunction of power and speed control,
- unacceptable cable twisting.

The safety system is based on fail-safe circuits, i.e. in the case of a fault, the open switches automatically drop into a safety position and trigger the appropriate safety systems. Apart from the automatic circuits, manually operated emergency stop switches should also be provided at all important workstations for the maintenance personnel. IEC Standard 61400-1 contains some further notes and requirements for the design of the protection system. For example, after an emergency stop of the turbine, restarting should no longer be possible without a system check and the turbine has been personnel. IEC Standard 61400-1 contains some further notes and requirements for the design of the safety system. For example, after an emergency stop of the turbine, restarting should no longer be possible without a system check and the turbine has been released for operation. It is also required that in the case of a conflict with the instructions of the control system, the safety system shall overrule the control function in either case.

The safety system is generally constructed using hard-wired circuits without having to rely on computers and relatively complex software. The rotor speed, in particular, must be recorded independently of the control system by means of an electro-mechanical sensor system with multiple redundancy. The hard-wired fail-safe circuits combine a number of normally open relay contacts, which are held close when everything works correctly. In the case of a detected fault, these contacts are lost and the safety system will be activated. It brings the turbine in a safe condition.

The safety system primarily activates the braking systems for the emergency rotor stop. In the case of large turbines, this can only be done by applying an aerodynamically effective measure at the rotor. In addition, other safety measures such as electrical disconnection from the grid and activation of the mechanical rotor brake are also activated (s.a. Chapt. 9.5.5 and 18.8.1).

11.7 Control System Implementation

The control system of a wind turbine includes a variety of sensors, actuator elements, decentralised controllers and processors, cable connections and higher order computers including the software. It is also connected with the controllers of the auxiliary systems, like heating or ventilation systems. Therefore the constructional implementation of the control system is split in several functional areas (Fig. 11.20). It normally consists of a central computer located in the tower base, a control and switch cabinet in the nacelle, and several decentralized controllers. The "intelligence" of the overall control system is located in the central computer (master computer). Here the set-point values are generated for the functional areas and the remote monitoring system is connected. In the control cabinet of the nacelle (slave-computer) the signals from the decentralized controllers are processed and the results transmitted to the central computer by means of a data-bus system. There is general tendency to decentralize detailed control logics and the corresponding hardware in several locations.

For example the blade pitch control is concentrated in the rotor hub (Fig. 11.21). Almost all the blade pitch control functions, from data acquisition through the control itself and to monitoring of the parameters, are largely autonomously handled by the so-called "pitch boxes". The signals will be transferred to the nacelle by means of a slip-ring connection. Similar decentralized controllers are used for the yaw system.

The components of the control system become more and more standardized. Numerous suppliers offer the hardware as well as software packages for standard situations. The control algorithms can be adapted to the specific requirements of the wind turbine. The communication is performed by real time data-bus connections, for example (PROFI BUS, Ether CAT).

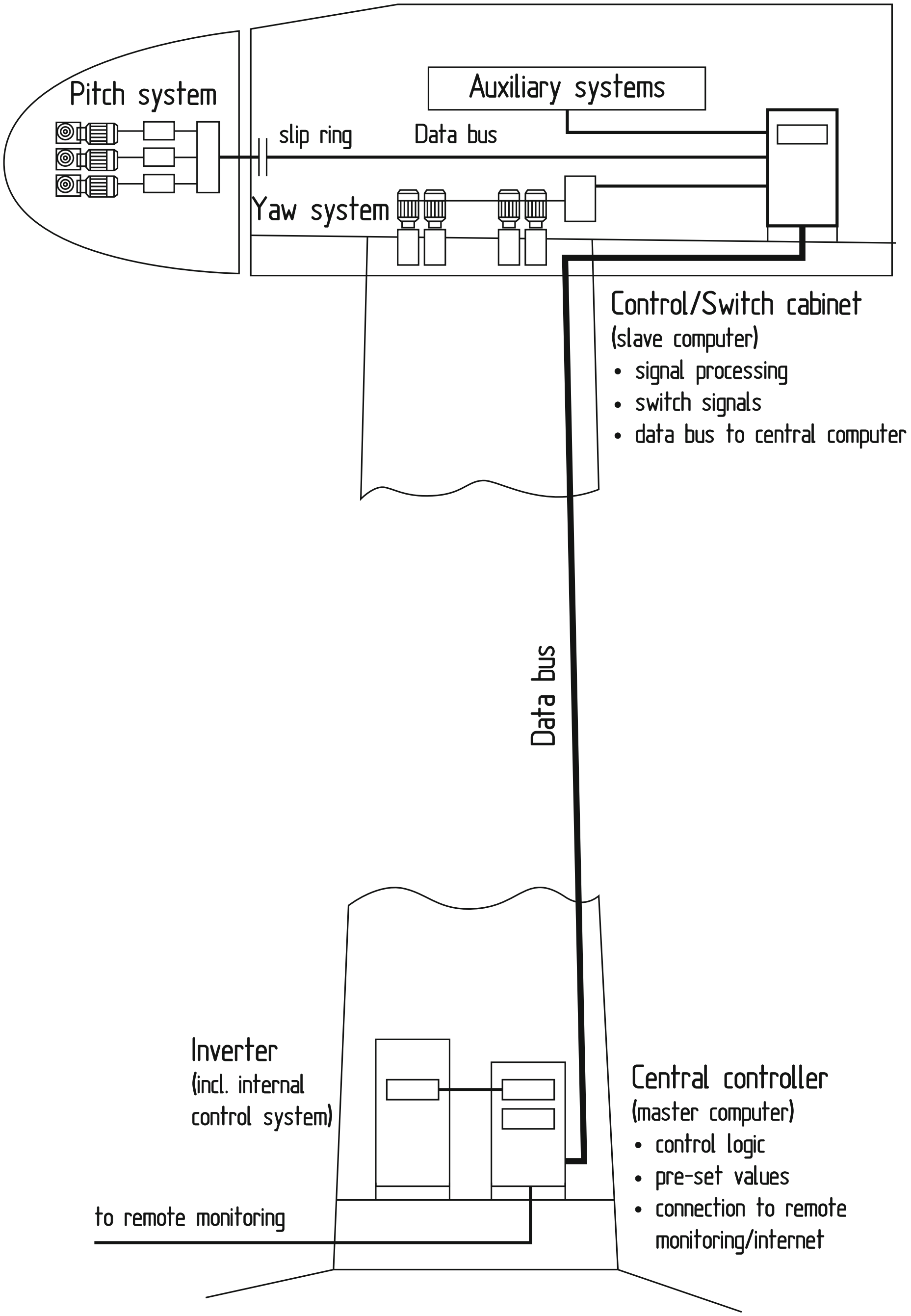

Fig. 11.20. Implementation of control system in a large wind turbine

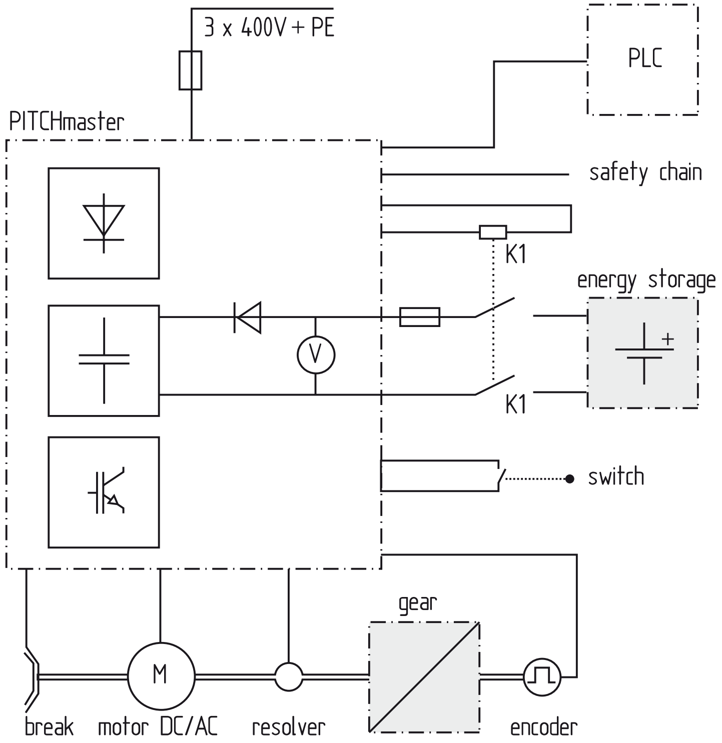

Fig. 11.21. Electric pitch control system (pitch box) in the rotor hub (Pitchmaster)

11.8 Interaction with the Grid

The basic idea for control systems and sequence control in parallel-grid operation consists in that the grid represents an invariable or rather unlimited situation from the point of view of the wind turbine, both with respect to the electrical parameters, particularly frequency and voltage, and with respect to its capability for absorbing the power fed in. This holds true as long as the wind power fed in is low in comparison with the load-carrying capability of the grid. In the meantime, however, conditions are beginning to change also in the strong interconnected European power system. The wind powers fed in are becoming greater and greater whilst the injection points are located in areas having weak feeders.

As wind energy becomes used more and more widely, the capability of wind turbines to respond to certain restrictions in the interconnected power system is gaining in importance. Some wind turbine manufacturers are already equipping the control system and sequence controller of their turbines in such a way that certain electrical grid parameters or their changes, respectively, are registered and the control and management system of the turbine responds in such a way that not only no unwanted loads on the grid are created but support is also provided for a weak grid. The prerequisite is an electrical and control-related design of the wind turbine which can do this. The best basis for this are variable-speed systems with synchronous generators and full power inverters for cos φ control. Naturally, the interaction of the control system of a wind turbine with the power grid has its limits.

The general requirements of power quality and allowable impacts from power production units are described in numerous national rules. The regional or local grid operators have more specific standards depending on the characteristic of their grids. A European standard (EN 50160) is under development. As an example the situation in Germany will be outlined. In January 2003, “E-on Netz”, the largest German power system operator, issued detailed grid connection regulations for their grid area [8]. Apart from the fact that the majority of wind turbines in Germany feed into the grid of E-on, it can be expected that these rules will become generally binding in Europe, albeit with local deviations. The rules apply to the high-voltage and extra-high voltage grid. Most of the requirements relate to the operation of an entire wind park which is connected to a certain grid connecting point and, therefore, do not necessarily need to be applied to individual turbines. The most important requirements from this set of regulations are:

Limiting the cut-in current

The cut-in current of the wind park must not be greater than 1.3 times the current corresponding to the grid connection capacity. In this context, attention must be paid to the high cut-in currents when connecting directly grid-coupled asynchronous generators to the grid. Modern asynchronous generators are therefore equipped with thyristor-controlled "soft grid coupling" (s.a. Chapt. 10.3.2).

Active-power output and generation management

After a lack of voltage, the rise in active power of a wind park must not exceed a gradient of 10% of the grid connection capacity per minute. In addition, the power system operators intend to limit the active-power output of the wind turbines under certain load conditions in the grid by means of a signal from their power system control centre. This so-called "generation management" is less of a control problem than an economic problem for the wind turbine operator.

Operation within predetermined voltage and frequency values

When certain predetermined limit values of grid voltage or frequency are exceeded in either direction, the wind turbine must disconnect itself from the grid within a few tens of milliseconds. This ensures that power feeding really only takes place within the limits of parallel-grid operation set by the power system operator. Should there be an increase in voltage, for instance at night due to a decrease in loads, the power output of the wind turbine must be automatically reduced. There must be no automatic separation from the grid within a frequency range of 47.5 to 51.5 Hz. Outside of this frequency range, the wind park must be separated from the grid without delay.

If a short-time voltage drop (short circuit) occurs in the grid, the wind park must remain connected to the grid over a period of up to 300 milliseconds until the voltage drops to 15% of the grid voltage. There must be no shut-down. This requirement, occasionally called "low voltage ride thru", is a critical point with many wind turbines and is frequently not met by older turbines. Short-time short circuits are relatively frequent with overhead transmission lines and are a consequence of dense snowfall, falling branches or contact with two wires by a bird.

Reactive-power exchange with the grid

It must be possible to operate the wind park with a power factor of between 0.975 (inductive) and 0.975 (capacitive) depending on the power system situation during active-power output. This requirement can be met in a relatively simple manner in the case of units which are connected to the grid via a frequency inverter.

Harmonics and flickering

The parameters to be maintained for permissible power system flows with regard to harmonics and flicker are specified in the grid connection rules with respect to the "Principles for the assessment of grid reactions" (VDEN 1992 and DIN EN 50160).

Some years ago, the harmonics emanating from wind turbines were the subject of fierce controversies with the power system operators. Due to the non-sinusoidal currents of the inverter, variable-speed units with frequency inverters generate harmonics in the grid. It is mainly the older, 6-pulse inverters, no longer state of the art today, which have a large harmonic component. The more recent 12-pulse inverters deliver a much smoother sinusoidal voltage. Applying the most developments of power electronics, for example pule-width-modulated inverters, quasi-sinusoidal currents can also be generated by variable-speed units (s.a. Chapt. 10.4.1).

Resumé

In principle, the new grid connection rules amount to the wind parks being capable to operate as "grid support systems", at least under certain grid conditions. This demand is justified in view of the increasing share of wind power in the grid. The generation of power from wind is reaching an order of magnitude requiring the wind power capacities having to be included in the overall power generation planning of the public utilities (see Chapt. 16.4).

The electrical characteristics of a wind turbine with respect to possible grid reactions and its capability to meet the demands of the required grid connection rules are determined by means of a so-called “grid compatibility check”. This check has been generally used for some years, at least in Germany and is performed as part of the licensing of new wind turbines [9]. During this check, the effects mentioned are measured and in addition the quality of the power output of the wind turbine is assessed. Also measured are the power peaks in the form of the instantaneous values (averaged over 8 grid periods) and the mean values over one and six minutes.

References

1. Kleinkauf, W., Leonhard, W., et al.: Betriebsverhalten von Windenergieanlagen, Gesamthochschule Kassel, Institut für Elektrische Energieversorgungssysteme und Technische Universität Braunschweig, Institut für Regelungstechnik, BMFT Report N2 03E-4362-A (1982)
2. Leonhard, W.: Control of Electrical Drives. Springer, New York (1985)
3. IEC: Wind Turbines- Part 121: Power Performance Measurements of Grid Connected Wind Turbines. Draft CDV 14/11 (2003)
4. Huß, G.: Anlagentechnisches Meßprogramm an der Windkraftanlage WKA-60 auf Helgoland, BMFT Report 0328508D (1993)
5. Bichler, U.J.: Synchronous Generators with Active Damping for Wind Power Stations. Institut für Regelungstechnik der Technischen Universität Braunschweig (1982)
6. Gasch, R., Twele, G.: Windkraftanlagen, 4.Auflage, Teubner, Wiesbaden (2005)
7. Cramer, G.: Anforderungen an die elektrische Ausrüstung und Regelung von Windenergieanlagen im Inselbetrieb, KFA-Seminar "Einsatz kleiner Windenergieanlagen in Entwicklungsländern" Göppingen (May 14-15,1985)
8. E-on Netz GmbH: Netzanschlußbedingungen für Hoch- und Höchstspannung, Bayreuth, Status (August 2003)