Chapter 4
Transducers for Energy Harvesting

E. Blokhina, A. El Aroudi and D. Galayko

4.1 Capacitive Transducers

This section presents the basic information describing capacitive transducers used as converters of mechanical energy into electricity [6, 16].

The widespread use of capacitive transducers has become possible thanks to the miniaturization of electronic systems. Indeed, capacitive transducers are inefficient at microscale, for reasons which will be explained later in this section. Capacitive transducers are mainly implemented with MEMS silicon technologies which are compatible with the requirements of batch fabrication.

Capacitive transducers are used as sensors/actuators for the transfer of information between the mechanical and electrical domains. For information processing, the functions describing relations between mechanical and electrical quantities should be linear. For that reason, the preferable mode of operation of the transducer/actuator is a small-signal mode, where the magnitude of dynamic quantities is small enough to negate the nonlinear distortions.

The energy conversion, however, sets very different constraints. Not only is the linearity of the conversion not important, but in many cases nonlinear behavior of electrical and mechanical devices is unavoidable or even desirable. The energy conversion devices operate at *large amplitude* mode, and linearized small-signal mode is not adequate for modeling of the behavior.

E. Blokhina
University College Dublin, Dublin, Ireland
e-mail: elena.blokhina@ucd.ie

A. El Aroudi
University Rovira i Virgili, Tarragona, Spain
e-mail: abdelali.elaroudi@urv.cat

D. Galayko (✉)
UMPC — Sorbonne Universities, Paris, France
e-mail: dimitri.galayko@lip6.fr

© Springer International Publishing Switzerland 2016

E. Blokhina et al. (eds.), *Nonlinearity in Energy Harvesting Systems*,
DOI 10.1007/978-3-319-20355-3_4

As will be shown, a capacitive transducer is an intrinsically nonlinear device. Moreover, in the mode of the energy conversion, the transducer is associated with conditioning electronics having a time-variant operation. Nonlinear models are required in the study and design of energy conversion systems with use of capacitive transducers.

4.1.1 Presentation of a Capacitive Transducer

A capacitive transducer is a physical capacitor whose geometry can change in time and so, to vary the electrical capacitance. Although a capacitor can be of any geometrical shape (spheric, cylindric,...), in practice, the most common shape is a parallel plate capacitor, whose geometry is given in Fig. 4.1. Such a capacitor is constituted from a pair of parallel conductive planes (electrodes) spaced by some distance, called "gap." A dielectric material can be present between the planes. The capacitance C_t of such a transducer is

$$C_t = \varepsilon_0 \varepsilon_r \frac{S}{d}, \tag{4.1}$$

where d is the distance between the planes (gap), S is the overlapping area of the planes, ε_0 is the permittivity of the vacuum (a fundamental constant, equal to $8.85 \cdot 10^{-12}\,\mathrm{Fm}^{-1}$), and ε_r is the dielectric constant of the material between the electrodes.

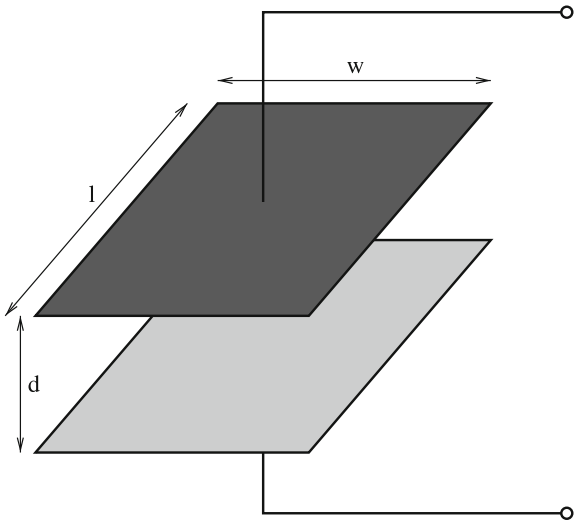

Fig. 4.1 Geometry of a parallel plate capacitor

The capacitance of a parallel plate capacitor is a function of three parameters, and a variation of each of them produces a variation of the capacitance

$$C_t(t) = \varepsilon_0 \varepsilon_r(t) \frac{S(t)}{d(t)}. \tag{4.2}$$

Most existing variable capacitors operate in air or in vacuum, so that $\varepsilon_r \approx 1$. However, there are "exotic" cases where the variation of the capacitance is produced by a motion of the dielectric material separating the electrodes(cf. Fig. 4.2), in particular, in fluidic devices.

A variable capacitor is usually obtained when one electrode of the capacitor moves with regard to the other. To simplify the analysis, it is usually considered that one electrode of the capacitor is fixed, and the other moves. This is the most common configuration in energy harvesters (and will generally be assumed in this book), although there are many other applications of capacitive transducers where both electrodes are mobile [7]. In principle, the motion can be in any direction, but in the majority of devices there are only two possible and exclusive kinds of motion: (i) electrodes move in their plane, or (ii) electrodes move along the axis normal to their planes. The choice of the particular motion mode is obtained by implementation of a particular geometry of capacitor, so that all undesirable directions of motion are blocked. We now consider two cases of variable capacitor geometry.

(1) *The parallel motion of electrodes*. Such a capacitor is called an "area overlap capacitor" (Fig. 4.3). In this case the distance between the electrodes is kept constant, and the capacitance varies according to

$$C_t(t) = \varepsilon_0 \frac{S(t)}{d}. \tag{4.3}$$

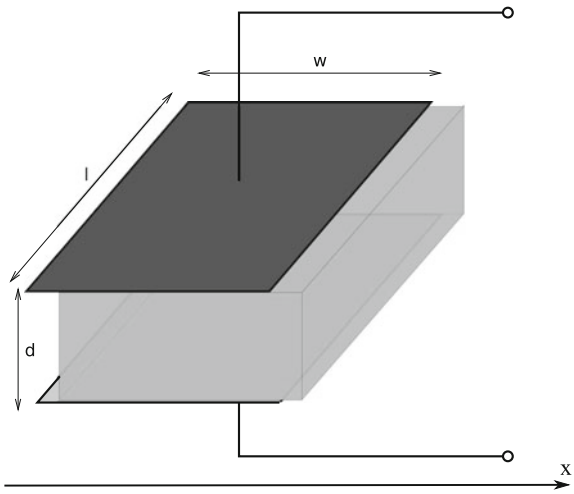

Fig. 4.2 Principle of a capacitive transducer with movable dielectric

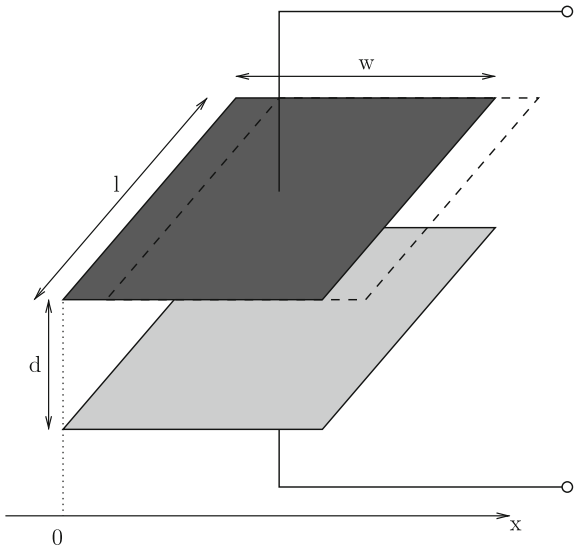

Fig. 4.3 Geometry of a transducer with parallel motion of electrodes

The variation of the overlapping area can be related to the relative displacement of the electrodes by a function $S(x)$, where $S(\cdot)$ depends on the geometry of the transducer. If the transducer electrodes have a rectangular shape (the most common in energy harvesters), and the mobile electrode moves in parallel with one of its sides, the function S is given by

$$S(x) = l(x_0 \pm x), \tag{4.4}$$

where l is the length of the side perpendicular to the motion, x_0 is the length of the overlapping rectangular area at rest. The parameter x_0 and the sign of x depend on the choice of the reference frame. For the structure given in Fig. 4.3, $x_0 = w$, and $S(x)$ is expressed as

$$S(x) = l(w - |x|). \tag{4.5}$$

In general, the relationship between the capacitance of a parallel plate transducer and the position of the mobile electrode (x) can be expressed as

$$C_t(x) = \varepsilon_0 \frac{l(x_0 \pm x)}{d}. \tag{4.6}$$

It should be noted that the function (4.4) may become zero. It is very important to remember, that the model of a parallel plate capacitor is only valid when the dimensions of the overlapping area are much greater than the gap. If the overlapping area goes to zero, there is residual capacitance, which is not accounted for anymore

by (4.1), but which is non zero. A typical plot of capacitance for a rectangular area overlap transducer versus position of the mobile electrode is given in Fig. 4.4. As can be seen, the relation between C_t and x is linear only when the overlapping area is large. Even if no overlap exists and the plates are separated far each from other (formally, it corresponds to a negative overlapping area), the capacitance is still not zero. Ignoring this point may lead to completely wrong results in modeling and simulation.

(2) *Perpendicular motion of the electrodes*. A transducer whose mobile electrode moves following the direction normal to the plane is called a "gap closing variable capacitor" (Fig. 4.5). Its capacitance changes according to:

$$C_t(t) = \varepsilon_0 \frac{S}{d(t)} \tag{4.7}$$

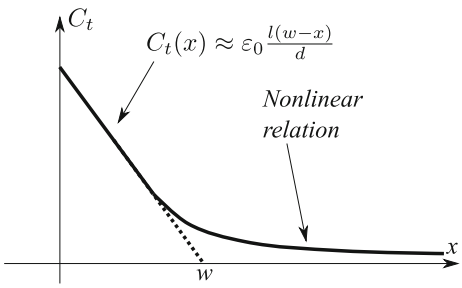

Fig. 4.4 The relationship between the capacitance of an area overlap transducer and the position of the movable electrode (Fig. 4.3). For the case when the overlapping area is large, $C_t(x)$ is linear, otherwise, when the overlapping area goes to zero and becomes negative, the characteristic is nonlinear

Fig. 4.5 Geometry of a capacitive transducer with gap-closing geometry

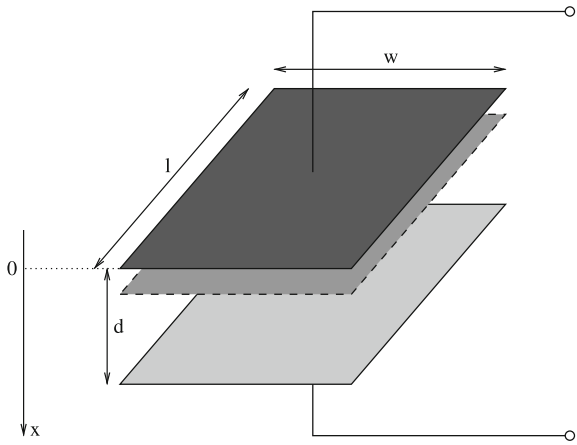

The transducer gap is linearly related to x

$$d(t) = d_0 \pm x(t). \tag{4.8}$$

Here d_0 is the initial gap of transducer at rest ($x = 0$). d_0 and the sign before x depend on the choice of the reference frame.

The capacitance is expressed over x as

$$C_t(x) = \varepsilon_0 \frac{S}{d_0 \pm x}. \tag{4.9}$$

It should be noted that $C_t(x)$ tends toward infinity when the denominator becomes zero. In practice, this corresponds to a strong increase in the transducer capacitance when the electrodes become separated by very small distance. In this case the attracting force approaches infinity as well, resulting in a strong risk of instability. For this reason stoppers are added in practical devices, to prevent the reduction of gap between the electrodes below some predefined value.

An important conclusion of this subsection is that the capacitance is a geometrical parameter, and the function $C_t(x)$ depends only on the geometry of the transducer.

4.1.2 Electrical Operation of a Variable Capacitor

From an electrical point of view, a capacitor is a system of two electrodes separated by a dielectric or by a vacuum. A capacitor behaves as an electrical element when its two electrodes have different electrical charges. If electrodes 1 and 2 have charges Q_1 and Q_2, the voltage between the electrodes is given by

$$V_{12} = \phi_1 - \phi_2 = \frac{Q_1 - Q_2}{2C}. \tag{4.10}$$

Here V_{12} is the voltage equal to a potential difference between the electrodes ($\phi_1 - \phi_2$). Note that the electrode having the highest charge has the highest potential.

In electronics, a capacitor is usually considered as an electrically neutral device, so that its electrodes have the same absolute charge, but of opposite sign. This charge is called "the charge of the capacitor." Its sign is defined by the sign of the charge in one of the electrodes chosen arbitrarily, called "positive electrode" and labeled by character "+" (cf. Fig. 4.6). This figure demonstrates also the definition of the conventional positive voltage of the capacitor (the arrow points toward the positive electrode). The equation describing the capacitor is written as

$$Q = CV \tag{4.11}$$

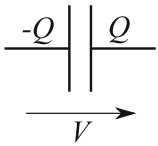

Fig. 4.6 Definition of the charge of the capacitor

The neutrality of a capacitor is a very important hypothesis for electrical circuit analysis. In particular, it allows the use of Kirchhoff laws for the circuit analysis (the current law). In practice, the neutrality of capacitors is ensured by existing DC (direct current) paths to the ground, thanks to different electrical devices or thanks to leakages.

It can be shown that a capacitor stores energy. This is the energy of the electrical field existing between the electrodes of the capacitance. Since this field is created by the charges on the capacitor, the stored energy W depends directly on the quantity of charges stored by the capacitance

$$W = \frac{Q^2}{2C} \tag{4.12}$$

This is a potential energy, and it is always positive.

4.1.3 Forces in a Capacitive Transducer

The existence of mechanical forces created by the electrical field of a capacitor allows the use of a capacitor as a potential electromechanical transducer. These forces are applied to all parts of a capacitor.[1] To calculate the mechanical force applied to some part of the capacitor along an axis x, the following mental experiment should be made:

- The considered part of the system should be made freely movable along the axe x,
- The considered part should be moved along this axis by infinitesimal distance $\mathrm{d}x$,
- the capacitance variation $\mathrm{d}C$ should be measured.

The force along the axe x is then calculated as

$$F_x = \frac{1}{2} V^2 \frac{\mathrm{d}C}{\mathrm{d}x}, \tag{4.13}$$

where V is the voltage of the capacitor.

[1] A force is a notion from mechanics, but sometimes in the literature the forces created by electrical phenomena are called "electrical forces." Their action on mechanical system are described by usual laws of mechanics.

As a consequence, an electrostatic force is only applied to the parts whose geometric position impacts the value of the capacitance: the electrodes and the dielectric between the plates. The force is oriented in the direction of *increasing* capacitance.

For the geometries of transducers considered in the previous subsections, the forces F_t are given by the following expressions. For an area overlap capacitor whose capacitance is given by (4.6)

$$F_t = \pm\frac{1}{2}V_t^2\varepsilon_0\frac{l}{d}. \tag{4.14}$$

For a gap-closing transducer whose capacitance is given by (4.9)

$$F_t = \mp\frac{1}{2}V_t^2\varepsilon_0\frac{S}{(d_0 \pm x)^2}. \tag{4.15}$$

Note that in the case where the transducer gap goes to zero, the force becomes infinite.

These expressions explain why a capacitive transducer is only efficient at the microscale. Indeed, the transducer force does not scale with the device dimensions (since both S and $(d_0 - x)^2$ scale quadratically), whereas mechanical forces are at least proportional to the dimensions for the springs. For the masses, the inertia force is proportional to the cube of linear dimensions. It means that electrostatic forces are too weak to be useful at the macroscale.

These expressions highlight the dependence of the transducer force on the voltage. The ability to modulate the transducer force by the applied voltage is a powerful tool for electrical synthesis of mechanical behavior. However, the transducer force is unilateral, i.e., cannot change sign, because of the square dependence of the voltage. This creates some problems both for sensor/actuator implementation [16] and for the energy conversion. One possible solution is the use of a differential capacitive transducer. Differential structures are often used for sensing/actuating applications, but they are too complex to be widespread in energy harvesting devices.

4.1.4 Energy Conversion with a Capacitive Transducer

The work of the force generated by the capacitive transducer represents the energy transferred between the mechanical and the electrical domains.

Suppose that during a time interval $[t_1, t_2]$ the capacitance of transducer C_t changes monotonically. The work produced by the force of transducer during a time interval $[t_1, t_2]$ is given by

$$A = \int_{t_1}^{t_2} F_t v dt = \int_{t_1}^{t_2} \frac{1}{2}V_t^2\frac{\mathrm{d}C_t}{\mathrm{d}x}\frac{\mathrm{d}x}{\mathrm{d}t}dt = \int_{C_1}^{C_2} \frac{1}{2}V_t^2\mathrm{d}C_t, \tag{4.16}$$

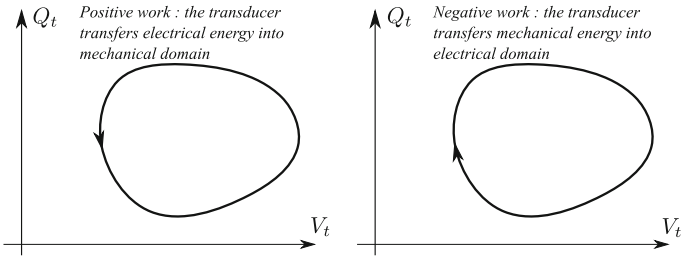

Fig. 4.7 Example of a cyclic operation of a capacitive transducer plotted in the charge-voltage plane

where $C_1 = C_t(t_1)$ and $C_2 = C_t(t_2)$, and v is the instantaneous velocity of the mobile electrode.

Since $V_t^2 \geq 0$, the work is positive when the capacitance increases, and is negative when the capacitance decreases. Mechanical energy is converted into electricity when this work is negative. By consequence, for the energy harvesting applications, the voltage on the transducer should be minimized when the capacitance increases, and maximized when the capacitance decreases.

The quantity C_t evolving in time can be seen as a path defined in the plane (V_t, Q_t), given by the relation $C_t = Q_t/V_t$, and the integral can be seen as a path integral. This allows an application of the formalism of vector calculus. Given $\mathrm{d}C_t = \mathrm{d}Q_t/V_t - (Q_t/V_t^2)\mathrm{d}V_t$, the above formula can be written as

$$A = \frac{1}{2}\int_{\Gamma} [V_t \mathrm{d}Q_t - Q_t \mathrm{d}V_t]\,, \tag{4.17}$$

where Γ is the path which the transducer state follows in the plane QV, between the times t_1 and t_2, and $\int_\Gamma$ is the path integral.

If the curve Γ forms a cycle so that the $C_t(t_1) = C_t(t_2)$, the work A is written as

$$A = \frac{1}{2}\oint_{\Gamma} [V_t \mathrm{d}Q_t - Q_t \mathrm{d}V_t]\,. \tag{4.18}$$

According to Green's theorem, this formula expresses the area enclosed by the curve Γ, if the path is positively oriented in the plane (V_t, Q_t), i.e., the path is counter clockwise in the QV plane in Fig. 4.7. (cf. proof in the appendix I). When the path is negatively oriented (clockwise), Eq. (4.18) is negative, and the area enclosed by the path represents the energy converted into electricity during the cycle of C_t variation. The line representing the state of the transducer in the (V_t, Q_t) plane is called "QV diagram," and is a very elegant representation widely used for the analysis of the energy conversion achieved by capacitive transducers.

4.1.5 Optimization of the Operation of a Capacitive Transducer

The goal when designing energy harvesters is to maximize the area of the cycle QV corresponding to the converted energy. Let us consider a transducer whose capacitance variation is between C_{min} and C_{max}. In the QV plane, all possible states of this transducer are limited by loci $Q_t = C_{min} V_t$ and $Q_t = C_{max} V_t$ (Fig. 4.8). This defines an open segment with infinite area on the QV plane, if there is no limit on the voltage on the transducer. In practice, the voltage is always limited by the technology, let us say, by a value V_{max}. In this way, an ideal QV cycle is a triangle, formed by the lines $C = C_{max}$, $C = C_{min}$, $V_t = V_{max}$ (triangle OMN, Fig. 4.8). Its area is given by

$$\Delta W = \frac{1}{2} V_{max}^2 (C_{max} - C_{min}). \tag{4.19}$$

Such a QV cycle is called "constant voltage QV cycle" [11]. This term emphasizes the fact that the energy conversion is achieved when the voltage on the transducer is constant.

This formula provides an opportunity to estimate the maximal energy and power that can be generated by a capacitive transducer in a realistic context. We take the value for C_{min} and C_{max} from a state-of-the art MEMS capacitive transducer [1] (40 pF and 140 pF respectively) and 50 V for V_{max} (the limit for the 0.35 μm technology of Austrian Microsystem). We obtain 125 nJ per cycle. And with the frequency of the capacitance variation at 100 hertz, it corresponds to 12 μW of converted power. This figure should be seen as the order of magnitude of the maximal convertible power with capacitive transducers at microscale. This value can be changed if one assumes different hypotheses on the frequency, transducer parameters, and the maximal voltages.

As follows from the formula (4.16), the operation of a capacitive transducer is fully controlled by the voltage waveform $V_t(t)$ applied to its electrodes as the transducer capacitance C_t varies. Indeed, for each value of C_t, as far as V_t is defined, the electrical state of the transducer is uniquely defined through the formula $Q_t = C V_t$. In this

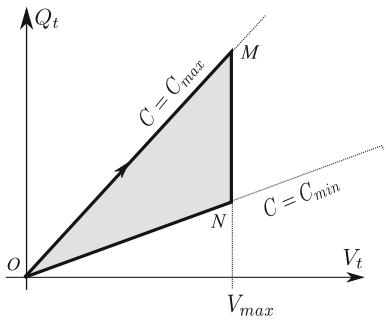

Fig. 4.8 Ideal QV cycle giving the following system parameters and limitations: the transducer capacitance varies from C_{min} to C_{max}, the maximal allowable voltage is V_{max}

way, by generating an appropriate voltage waveform on the transducer, it is possible to "synthesize" any desirable QV cycle. This is one of the roles of the *conditioning circuit*: definition of a dynamic biasing required for the energy conversion by the transducer. In that way, a capacitive vibration energy harvester is composed of a mechanical device, of a capacitive transducer, and of a conditioning circuit which sets dynamically the voltage V_t and the charge Q_t of the transducer, cf. Fig. 1.4

However, the QV cycles implemented practically are often different from the optimal cycle given in Fig. 4.8. The first reason is the difficulty to generate the optimal QV cycle at a reasonable energy cost. Second, the optimization of the converted energy is only one of two roles of the conditioning circuit. The other role is the optimal transmission of the converted energy toward the storage or load device. The compromise between the efficiency of these two functions results in suboptimal power conversion. Design of conditioning circuits will be discussed in Chap. 8.

4.1.6 Electromechanical Coupling

In the previous subsections, we assumed a defined variation of the transducer capacitance, between C_{min} and C_{max}. This hypothesis is non realistic, and that can be highlighted in the following mental experiment. Imagine a transducer attached to a given resonator submitted to some external vibrations. For some conditions, the capacitance of the transducer varies between C_{min} and C_{max}. According to (3.92), there is an upper bound of the power $P_{ext_{max}}$, that the system is able to convert from the mechanical to the electrical domain. Suppose that the triangular cycle of Fig. 4.8 is used. According to the Eq. (4.19), the energy converted by the transducer can have any large value, if the voltage V_{max} is not limited. There is an apparent contradiction, which is solved by the consideration of the electromechanical coupling. Indeed, assuming a given variation of the transducer capacitance is equivalent to assume a given motion of the mobile mass. However, the energy conversion is done through an application to the mass of the transducer's force, which is proportional to the square of the voltage. If the voltage is high, this force is large, and the motion of the mobile mass is likely to be affected by the process of the energy conversion. By consequence, the capacitance variation of the transducer is affected, therefore enforcing the fundamental limit given by (3.92).

This situation explains the difficulty in analysis and design of capacitive vibration energy harvesters. In order to analyze the energy conversion of the transducer, the capacitance variation (and hence, the motion of the mobile mass) should be known, but the mechanical dynamics of the system are strongly affected by the electrical operation of the transducer, especially when the energy conversion is to be maximized. More insight into the methods allowing analysis and design of kinetic energy harvesters with capacitive conversion will be presented in Chaps. 8 and 9.

4.2 Piezoelectric Transducers

4.2.1 Piezoelectric Mechanism

This section describes briefly energy harvesting using the piezoelectric mechanism. Piezoelectric energy harvesting is the process of acquiring the energy surrounding a vibrating system and converting it into usable electrical energy using a piezoelectric transducer. Piezoelectricity means electrical energy that results from mechanical pressure. It is generated by the accumulation of electric charge in certain solid materials when they are mechanically pressed. The piezoelectric effect was discovered in 1880–1981 by the French Curie brothers [2, 3] in naturally occurring crystals. However, it was only in 1950 s that started to be used for industrial applications. Since then man-made materials have been also demonstrated to exhibit piezoelectric effects which have been increasingly used and can be regarded as a mature technology since it is being exploited in various applications such as medical [17], transportation, [20] and cell phone battery chargers among others. In the transportation industry, for example, piezoelectric elements are used, among others, as knock sensors for detecting irregular combustion, for ultrasonic distance sensors for parking, fuel injection systems, active vibration reduction, and for energy harvesting [13]. Depending of what type of physical effect is used, piezoelectric can be designed to operate as sensors, actuators, or transducers [18]. The first case makes use of the direct piezoelectric effect and the mechanical energy is transformed into an electrical energy which is manifested as voltage signal between the surfaces of the piezoelectric material (Fig. 4.9).

Actuators takes advantage of the reversible process of piezoelectricity in the sense that when a voltage is applied to a piezoelectric material this will deform (Fig. 4.10).

The deformation in the reverse process is usually very slight and proportional to the voltage applied, and so the reverse effect finds application in precise movement detection on the microscale. The piezoelectric sensor converts mechanical energy into electrical energy, and the actuator converts electrical energy into mechanical energy. Finally, in transducers both effects are used within the same device. Therefore, a transducer may be used as an actuator.

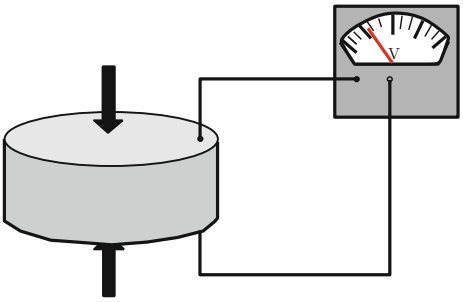

Fig. 4.9 Direct piezoelectric effect

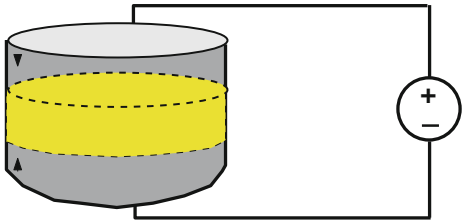

Fig. 4.10 Reverse piezoelectric effect

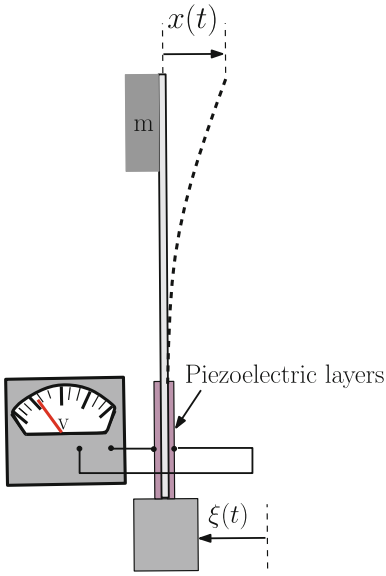

Fig. 4.11 A cantilever beam-based energy harvester

4.2.2 Energy Harvesting Using Piezoelectric Transducers

The use of piezoelectric effect in energy harvesting applications has been investigated since the beginning of the 1990s and since then it became an emerging technology. When a body, to which a piezoelectric material is attached, moves, the last one vibrates and produces electricity. The piezoelectric energy harvesting produces relatively higher voltage and power density levels than electromagnetic and electrostatic harvesters. One of the most effective methods of implementing an energy harvester system using piezoelectric materials is to use mechanical vibration to apply a strain energy to it. Energy harvesting from mechanical vibration usually uses ambient vibration around the harvester as an energy source, and then converts it into electrical energy, in order to power other devices ranging from digital electronics to wireless transmitters. The piezoelectric energy harvester is typically a cantilever beam structure with piezoelectric layers attached on the beam and a mass at its free end to amplify strains resulted from a given external force $\xi(t)$ (Fig. 4.11).

Beams and cantilevers can be considered as elastic systems and are usually modeled by distributed-parameter models represented by partial differential equations with specified boundary conditions. The motion of the beam can be described by the so called Euler–Bernoulli equation. For small oscillations, the response can be adequately described by linear equations and boundary conditions. Energy harvesters can be modeled by a reduced-order single degree of freedom spring–mass systems. However, in general, the governing equations, boundary conditions, or both are nonlinear.

The schematic diagram representation of the model is shown in Fig. 4.12. It consists of a typical spring–mass-damper system with a mass m, a total damping b, and an external force $\xi(t)$ as source of vibration. By developing the Euler–Bernoulli equation and performing a model reduction the following mass–spring dynamic model is obtained for the considered transducer,

$$m\ddot{x} = -\frac{\partial W_p}{\partial x} - b\dot{x} + \xi(t) \tag{4.20}$$

where x is the displacement, m represents the effective mass of the layer, and b stands for the damping factor. Different kinds of external vibrational source $\xi(t)$ can be considered. In some cases, these sources are governed by stochastic laws and their parameters can only be known in terms of statistical estimators such as mean values and variances [4, 10]. However, there are other applications where these sources can be considered deterministic signals such as in rotating machines and in vehicle and aircraft tires [20]. In the first case the idealized excitation sinusoidal term will only represent an approximation of the real case.

In order to take into account the dynamic coupling of the piezoelectric device, an extra differential equation describing the output voltage v_o (applied to the load) must be added to the system in (4.20). Considering resistive load R is connected at the output of the transducer and applying Kirchoff's voltage law for the electrical subsystem and the second Newton law for the mechanical part, the following coupled governing differential equation is obtained

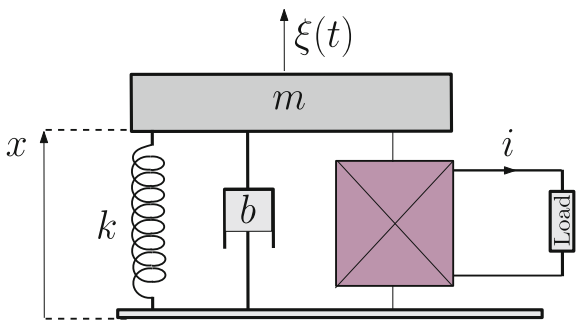

Fig. 4.12 Schematic diagram the spring-mass-damper model for a piezoelectric transducer

$$m\ddot{x} + \frac{\partial W_p}{\partial x} + b\dot{x} = \Gamma_v v_o + \xi(t) \tag{4.21}$$

$$\dot{v}_o + \frac{1}{RC} v_o = \alpha \dot{x} \tag{4.22}$$

where Γ_v is the piezoelectric coupling parameter in the mechanical part of the system, R is the resistive load, C is the equivalent capacitance of the piezoelectric layers, and α is the piezoelectric coupling parameter in the electrical part of the system. In the linear case, the potential energy is given by

$$W_p(x) = \frac{1}{2} k x^2 \tag{4.23}$$

Therefore, the model described in (4.21)–(4.22) becomes as follows:

$$m\ddot{x} + b\dot{x} + kx = \Gamma_v v_o + \xi \tag{4.24}$$

$$\dot{v}_o + \frac{1}{RC} v_o = \alpha \dot{x}. \tag{4.25}$$

A state-space model can be obtained from the previous mathematical representation for numerical simulation and a study of the harvested voltage v_o and the corresponding harvested power $P = v_{o,\mathrm{rms}}/R$ can be analyzed in terms of the excitation level using simple linear theory.

For applications where the vibration frequency is known, linear piezoelectric harvesters can be efficient. However, like in other kind of energy harvesting technologies, the main drawback of a linear piezoelectric vibration energy harvester is a narrow bandwidth implying a tight tuning of the linear resonant harvester to match the vibrating source frequency when this is uncertain or time varying. The next section gives more details on the shortcoming of linear resonators operating as energy harvesters and presents some existing alternatives.

As mentioned previously, in most of the reported studies, the energy harvesters are designed as linear resonators by matching the resonant frequency of the harvester with that of the external excitation to extract maximum power. This maximum power extraction depends on the quality factor (Q factor) of the linear resonator. However, it is viable only when the excitation frequency is known a priori. Moreover, a maximum energy extraction with a high Q factor will paradoxically imply a limited and narrow frequency range within which energy can be harvested. The performance of these systems is therefore rapidly degraded if the excitation frequency is far from the resonant one and they are efficient only when an optimum design is implemented by tuning the resonance frequency to match with the ambient source vibrations frequency. However, in environments where no single dominant frequency exists, these performances can be lowered significantly as the excitation frequency moves away from the designed frequency [9]. Some solutions have been reported recently to remedy these problems. Among them, resonance tuning and frequency up-conversion techniques [14, 19]. These methods can overcome the above mentioned problems

at the expense of making their implementation a challenging task. For instance, resonance tuning implies the change of the mass of the harvester while frequency-up conversion would imply the use of an array of resonators which would increase the size and cost of the harvester and making it not a suitable choice for small self-powered portable devices.

Traditionally, nonlinearities are to be avoided in device design. However, recently these nonlinearities have been shown to have potential to allow designers to take advantages of nonlinear behavior in certain applications [9], where the performance of energy harvesters is enhanced by inducing a bistable potential well through introducing suitable polynomial nonlinearities inducing a double well potential effect which makes the harvester efficient in a broad frequency range including low frequencies. Using this approach, rather than resonance frequency tuning, the nonlinearity of the system is exploited to improve the performances of the energy harvester within a wide frequency range outperforming, in this way, classical resonant energy harvesters [9, 21]. These techniques have been demonstrated to work both at the microscale [8] and nano-scale [10]. Polynomial nonlinearity is not the only way to enhance the performances of the harvesters at low frequencies. Other alternative inducing similar double well effect is in [22].

Double well potential in piezoelectric transducers can be induced by placing permanent magnets in the proximity of the proof mass (Fig. 4.13) forming the double well beam system studied in [12] for the first time.

It consists of a cantilever beam hung vertically with the free end attached by two magnets as shown in Fig. 4.13. The harvester is realized with a piezoelectric beam, in which magnetic effect induces double well potential. On the free end of the beam

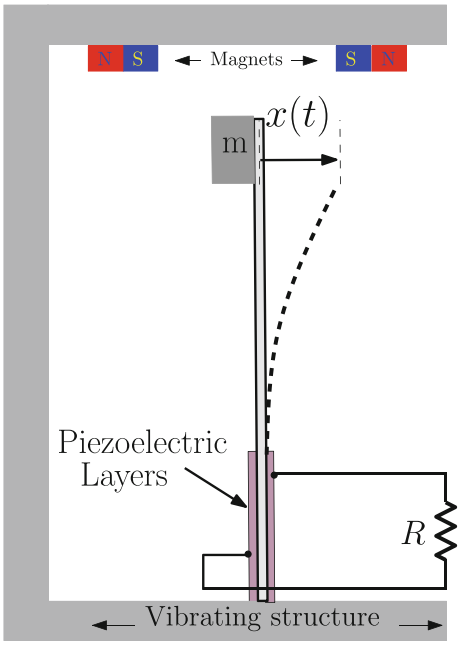

Fig. 4.13 An example of a piezoelectric cantilever beam energy harvester system arranged such that it has two different equilibrium point in the absence of excitation force by placing two magnets in the proximity of the free end

two magnets has been added. In the presence of vibration the structure oscillates making the piezoelectric beam to generate a voltage. The magnetic filed makes the potential energy to be nonharmonic and the equation of motion of the harvesting piezoelectric beam to be nonlinear The resulting potential energy can be expressed as follows:

$$W_p(x) = \frac{1}{2}k_1x^2 + \frac{1}{4}k_2x^4 \tag{4.26}$$

and the resulting equation of motion becomes as follows: [5]

$$m\ddot{x} + b\dot{x} + k_1x + k_2x^3 = \Gamma_v v_o + \xi, \tag{4.27}$$

$$\dot{v}_o + \frac{1}{RC}v_o = \alpha\dot{x}. \tag{4.28}$$

The voltage produced from the piezoelectric layers is an irregular AC signal which is then rectified by a diode bridge AC-DC rectifier. A filtering capacitor C is also placed in parallel with the load as shown in Fig. 4.14.

Let us consider the linear case for simplicity. The equivalent circuit representation of the piezoelectric harvester is depicted in Fig. 4.15. There, the mass m has been replaced by the inductance L_{eq}, the damping coefficient b has been replaced by a resistor with resistance R_{eq} and finally, the spring has been modeled by a capacitor

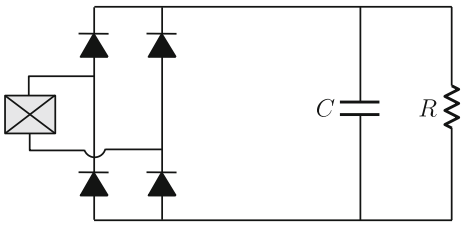

Fig. 4.14 Schematic diagram of the energy harvester based on a piezoelectric transducer

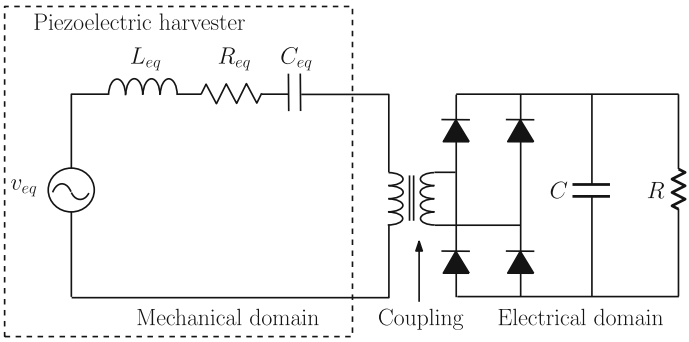

Fig. 4.15 Equivalent circuit diagram of the energy harvester based on a piezoelectric transducer

with capacitance C_{eq}. This model can be used for simulations, design, and analysis. The transformer represents the coupling effect. Introducing nonlinear effect can also be done by replacing the linear equivalent capacitance C_{eq} by a nonlinear one.

Appendix I

In this section, we present the demonstration of the fact that the area of a charge-voltage cycle performed by a variable capacitance is numerically equal to the electrical energy generated or absorbed by the capacitance, depending on the cycle direction.

The demonstration starts from the formula (4.18) expressing the work achieved by the capacitive transducer in the mechanical domain

$$A = \frac{1}{2}\oint_{\Gamma}[V\mathrm{d}Q - Q\mathrm{d}V]. \tag{4.29}$$

The Green theorem states that for a positively oriented, piecewise smooth, simple closed curve Γ in a right-handed plane (V, Q), for a region D bounded by Γ and for functions $L(V, Q)$, $M(V, Q)$ defined on an open region containing D and having continuous partial derivatives, the following equality is true [15]:

$$\oint_{\Gamma}(L\mathrm{d}V + M\mathrm{d}Q) = \iint_{D}\left[\frac{\partial M}{\partial V} - \frac{\partial L}{\partial Q}\right]\mathrm{d}V\mathrm{d}Q \tag{4.30}$$

Applying this theorem to Eq. (4.29), we get

$$A = \frac{1}{2}\oint_{\Gamma}[-Q\mathrm{d}V - V\mathrm{d}Q] = \frac{1}{2}\iint_{D}[1+1]\mathrm{d}V\mathrm{d}Q = \iint_{D}\mathrm{dVdQ}. \tag{4.31}$$

The last double integral expresses the area of the domain D enclosed by the curve. For a positively oriented (counterclockwise) path, A is positive: that means that the energy is transferred from the electrical into the mechanical domain. Conversely, for a negatively inverted (clockwise) path, the transducer's force work is negative, and the elctrical energy is converted from the mechanical energy.

References

1. Basset, P., Galayko, D., Cottone, F., Guillemet, R., Blokhina, E., Marty, F., & Bourouina, T. (2014). Electrostatic vibration energy harvester with combined effect of electrical nonlinearities and mechanical impact. *Journal of Micromechanics and Microengineering*, *24*(3), 035,001.

2. Curie, J., & Curie, P. (1880). Development, via compression, of electric polarization in hemihedral crystals with inclined faces. *Bulletin de la Societe de Minerologique de France*, *3*, 90–93.
3. Curie, J., & Curie, P. (1881). Contractions and expansions produced by voltages in hemihedral crystals with inclined faces. *Comptes Rendus*, *93*, 1137–1140.
4. El Aroudi, A., Lopez-Suarez, M., Alarcon, E., Rurali, R. & Abadal, G. (2013). Nonlinear dynamics in a graphene nanostructured device for energy harvesting. In *IEEE International Symposium on Circuits and Systems (ISCAS)*, pp. 2727–2730.
5. Erturk, A., & Inman, D. (2011). Broadband piezoelectric power generation on high-energy orbits of the bistable duffing oscillator with electromechanical coupling. *Journal of Sound and Vibration*, *330*(10), 2339–2353.
6. Fedder, G. K. (1994). Simulation of microelectromechanical systems. Ph.D. thesis, University of California at Berkeley.
7. Galayko, D., Kaiser, A., Legrand, B., Buchaillot, L., Collard, D., & Combi, C. (2005). Tunable passband t-filter with electrostatically-driven polysilicon micromechanical resonators. *Sensors and Actuators A: Physical*, *117*(1), 115–120.
8. Gammaitoni, L., Neri, I., & Vocca, H. (2009). Nonlinear oscillators for vibration energy harvesting. *Applied Physics Letters*, *94*, 164,102.
9. Gammaitoni, L., Travasso, F., Orfei, F., Vocca, H., & Neri, I. (2011). Vibration energy harvesting: Linear and nonlinear oscillator approaches. INTECH Open Access Publisher.
10. López-Suárez, M., Rurali, R., Gammaitoni, L., & Abadal, G. (2011). Nanostructured graphene for energy harvesting. *Physical Review B*, *84*(16), 161,401.
11. Meninger, S., Mur-Miranda, J., Amirtharajah, R., Chandrakasan, A., & Lang, J. (2001). Vibration-to-electric energy conversion. *IEEE Transactions on Very Large Scale Integration (VLSI) Systems*, *9*(1), 64–76.
12. Moon, F., & Holmes, P. J. (1979). A magnetoelastic strange attractor. *Journal of Sound and Vibration*, *65*(2), 275–296.
13. Nuffer, J., & Bein, T. (2006). Applications of piezoelectric materials in transportation industry. In: *Global Symposium on Innovative Solutions for the Advancement of the Transport Industry*, San Sebastian, Spain.
14. Ramlan, R., Brennan, M., Mace, B., & Kovacic, I. (2010). Potential benefits of a non-linear stiffness in an energy harvesting device. *Nonlinear Dynamics*, *59*(4), 545–558.
15. Riley, K., Hobson, P., & Bence, S. (2006). Mathematical Methods for Physics and Engineering: A Comprehensive Guide. Cambridge University Press. http://books.google.com.ua/books?id=Mq1nlEKhNcsC.
16. Senturia, S. D. (2001). Microsystem design, vol. 3. Kluwer academic publishers Boston.
17. Smith, W. A. (1986). Composite piezoelectric materials for medical ultrasonic imaging transducers—a review. In *Sixth IEEE International Symposium on on Applications of Ferroelectrics*, pp. 249–256.
18. Sodano, H. A., Inman, D. J., & Park, G. (2004). A review of power harvesting from vibration using piezoelectric materials. *Shock and Vibration Digest*, *36*(3), 197–206.
19. Tang, L., Yang, Y., & Soh, C. K. (2010). Toward broadband vibration-based energy harvesting. *Journal of Intelligent Material Systems and Structures*, *21*(18), 1867–1897.
20. Toh, T. T., Bansal, A., Hong, G., Mitcheson, P. D., Holmes, A. S., & Yeatman, E. M. (2007). Energy harvesting from rotating structures. Technical Digest PowerMEMS 2007, Freiburg, Germany, 28–29 November 2007 pp. 327–330.
21. Trigona, C., Dumas, N., Latorre, L., Andò, B., Baglio, S., & Nouet, P. (2011). Exploiting benefits of a periodically-forced nonlinear oscillator for energy harvesting from ambient vibrations. *Procedia engineering*, *25*, 819–822.
22. Vocca, H., Neri, I., Travasso, F., & Gammaitoni, L. (2012). Kinetic energy harvesting with bistable oscillators. *Applied Energy*, *97*, 771–776.