31

MODELS FOR TILTING BODY VEHICLES

The models seen in the previous chapters dealt with vehicles that maintain their symmetry plane more or less perpendicular to the ground; i.e. they move with a roll angle that is usually small. Moreover, the pitch angle was also assumed to be small, with the z axis remaining close to perpendicular to the ground. Since pitch and roll angles are small, stability in the small can be studied by linearizing the equations of motion in a position where $\theta = \phi = 0$.

Two-wheeled vehicles are an important exception. Their roll angle is defined by equilibrium considerations and, particularly at high speed, may be very large. To study the stability in the small, it is still possible to resort to linearization of the equations of motion, but now about a position with $\theta = 0$, $\phi = \phi_0$, where ϕ_0 is the roll angle in the equilibrium condition. An example of this method is shown in Appendix B, where the equation of motion of motorcycles is discussed.

Two-wheeled vehicles aside, this condition also occurs when the body of the vehicle is inclined with respect to the perpendicular to the road; this may be accomplished manually, as in motorcycles, or by devices (usually an active control system) that hold the roll angle to a value determined by a well-defined strategy. Vehicles of this type are usually defined as *tilting body vehicles*.

The most common application of tilting body vehicles today is in rail transportation, but road vehicles following the same strategy, particularly those with three wheels, have been built.

Rolling may be controlled according to two distinct strategies: by keeping the z-axis in the direction of the local vertical or by insuring that the load shift between wheels of the same axle vanishes. In the case of two-wheeled vehicles, the latter strategy results in maintaining roll equilibrium The two strategies coincide

G. Genta, L. Morello, *The Automotive Chassis, Volume 2: System Design*, Mechanical Engineering Series,
© Springer Science+Business Media B.V. 2009

only if the roll axis is located on the ground and no rolling moments act on the vehicle, so that the wheels in particular produce no gyroscopic moment.

Tilting body vehicles arouse much interest because they allow us to build tall vehicles that, although having a limited width (or better having a large height/width ratio), have good dynamic performance, particularly in terms of high speed handling. It is thus possible to build vehicles that combine the typical advantages of motorcycles (good handling in heavy traffic conditions, low road occupation, ease of parking) with those of cars (ease of driving, active and passive safety, shelter from bad weather, no equilibrium problem when operating with frequent stops, etc.).

As always occurs when new concepts are experimented with, many configurations are considered both for geometry and mechanical solutions as well as hardware and software for the tilt control. No mutually agreed upon solution has yet arisen.

Most such vehicles are three-wheeled, both for legal and fiscal reasons (in many countries vehicles with three wheels have particular fiscal advantages). They are also much simpler and potentially lower in cost. If a two-wheel axle is needed to control tilting (solutions using a gyroscope to control tilting and thus do away with the need for an axle with two wheels, were proposed but seldom tested), having a single wheel on the other axle simplifies the mechanical layout, reducing weight, cost and size. Body tilting eliminates the stability problems typical of three-wheeled vehicles by reducing or eliminating load shift. In some solutions the single wheel is at the front, while in others it is at the back.

There are solutions where the roll axis is physically identified by a true cylindrical hinge located between a rigid axle and the vehicle body. The two-wheeled axle may be a solid axle or made by two independent suspensions with limited excursion, particularly for roll motions, connected to a frame that in turn carries the cylindrical hinge connected to the body (Fig. 31.1a). If the vehicle has four wheels, the roll centers of the two axles, materialized by two cylindrical hinges, identify the roll axis. If the vehicle has three wheels, the roll axis is

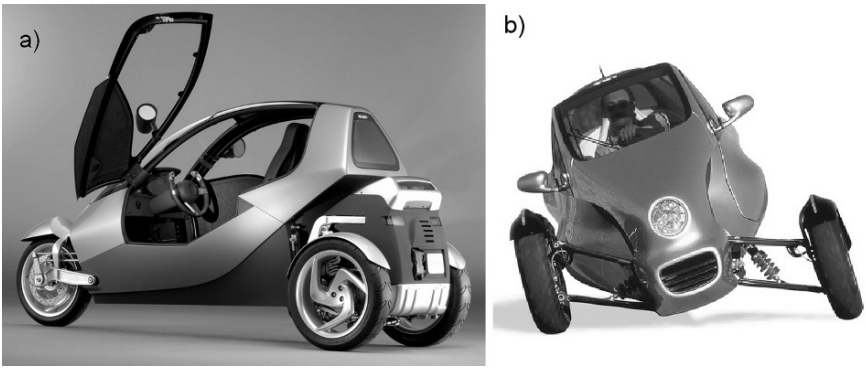

FIGURE 31.1. Prototypes of tilting vehicles. a): BMW C.L.E.V.E.R; b) Mercedes F 300. http://it.cars.yahoo.com/06062006/254/t/bmw-c-l-v-r-concept.html; http://www.3wheelers.com/mercedes.html.

identified by the center of the tire-road contact zone of the single wheel and the center of the cylindrical hinge on the two-wheeled axle. In this way the roll axis remains in a more or less fixed position in roll motion.

Usually, however, a different solution is found: The axle with two wheels has an independent suspension that allows large roll rotations of the body and behaves like a roll hinge (Fig. 31.1b). The roll center of the suspension is virtual, because it is not physically identified by a hinge; its position changes during roll motion. The roll center is then a fixed point only for small angles about the symmetric position (vanishing roll angle). In the case of large roll angles the roll center, and the roll axis as well, lies outside the symmetry plane of the body.

31.1 SUSPENSIONS FOR HIGH ROLL ANGLES

The wheels remain more or less perpendicular to the ground (the inclination angle of the wheels, here confused with the camber angle, is small) in those cases where the roll axis is defined by a physical hinge located between the frame carrying the suspension and the vehicle body. When independent suspensions directly attached to the vehicle body are used, on the other hand, it is possible to maintain the midplane of the wheels parallel to the symmetry plane of the body, i.e. $\phi = \gamma$, or $\partial\gamma/\partial\phi = 1$ or, at least, to obtain a large camber angle.

In such cases the possibility of setting the wheels at a large camber angle is interesting: Since the vehicle tilts towards the inside of the turn, camber forces add to sideslip forces, as in two-wheeled vehicles. Moreover, it is possible to exploit the difference in camber angles of the wheels of the two axles to modify the handling characteristics of the vehicle.

In the following sections two layouts will be considered: Trailing arms and transversal quadrilateral suspensions[1].

31.1.1 Trailing arms suspensions

Suspensions of this kind are characterized by

$$\frac{\partial t}{\partial z} = \frac{\partial \gamma}{\partial z} = \frac{\partial t}{\partial \phi} = 0 \quad , \quad \frac{\partial \gamma}{\partial \phi} = 1$$

for small angles about the symmetrical conditions.

The track, defined as the distance between the centers of the contact areas of the two wheels of an axle, and the camber angle remain constant even at large vertical displacements. The camber angle also remains equal to the roll angle for large values of the latter. Indeed, the track is no longer constant at large roll angles, but becomes

[1]The term SLA suspension does not apply here, since the upper and lower arms have roughly the same length.

$$t = \frac{t_0}{\cos(\phi)} \ .$$

The changes in track, which are negligible for small values of the roll angle, increase with ϕ. When $\phi = 45°$ (a value still reasonable in motorcycles), the track increases by 40%. The roll center remains on the ground, so that a suspension of this type behaves like a single wheel in the symmetry plane, except for the changes of track. However, the wheels move in a longitudinal direction, both for vertical and roll displacements, and changes in the direction of the kingpin axis also occur, if the suspension is used for steering wheels. Such displacements depend on the length of the arms and their position in the reference conditions.

31.1.2 Transversal quadrilateral suspensions

If the wheels must be maintained parallel to the symmetry plane, the transversal quadrilaterals must actually be parallelograms: the upper and lower arms must have the same length and be parallel to each other. In this case it follows that

$$\frac{\partial \gamma}{\partial z} = 0 \quad , \quad \frac{\partial \gamma}{\partial \phi} = 1,$$

in any condition. If the links connecting the body with the wheel hub are horizontal (Fig. 31.2a), the roll center of the suspension lies on the ground for $\phi = 0$.

As usual, the suspension has two degrees of freedom, designated as ϕ_1 and ϕ_2 in Fig. 31.2b.

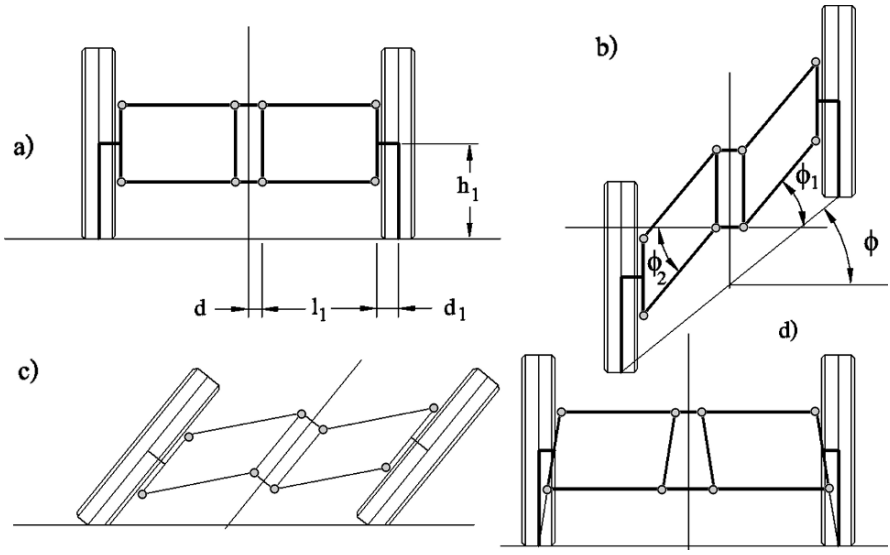

FIGURE 31.2. Transversal parallelograms suspension. a): Roll axis located on the ground and geometrical definitions; b) skew-symmetric deformation corresponding to roll; c): suspension in high roll conditions; d) configuration equivalent to a).

If angles ϕ_i are positive when the wheel moves in the up direction (with respect to the body), the roll angle and the displacement in the direction of the z axis of the body is easily computed:

$$\begin{aligned} \phi &= \operatorname{artg}\left(\frac{l_1\left[\sin\left(\phi_1\right)-\sin\left(\phi_2\right)\right]}{2\left(d+d_1\right)+l_1\left[\cos\left(\phi_1\right)+\cos\left(\phi_2\right)\right]}\right) , \\ \Delta z &= -l_1\frac{\left(d+d_1\right)\left[\sin\left(\phi_1\right)+\sin\left(\phi_2\right)\right]+l_1\sin\left(\phi_1+\phi_2\right)}{2\left(d+d_1\right)+l_1\left[\cos\left(\phi_1\right)+\cos\left(\phi_2\right)\right]} . \end{aligned} \tag{31.1}$$

It is also possible to identify a symmetrical mode, linked with vertical displacement, and a skew-symmetrical mode, linked with roll. The former is characterized by $\phi_2 = \phi_1$, the latter by $\phi_2 = -\phi_1$. The skew symmetrical mode causes no vertical displacements of the body and the symmetrical one causes no roll, even for angle values that go beyond linearity.

Remark 31.1 *The possibility of expressing a generic motion as the sum of a symmetric and a skew-symmetrical mode is limited to conditions where the superimposition principle holds, that is, to conditions where it is possible to linearize the trigonometric functions of the angles.*

Let

$$t_0 = 2\left(d+d_1+l_1\right)$$

be the reference value for the track; in a symmetrical mode the track depends on ϕ_1 through the relationship

$$t = 2\left[d+d_1+l_1\cos(\phi_1)\right] = t_0 - 2l_1\left[1-\cos(\phi_1)\right] . \tag{31.2}$$

Only when $\phi_1 = 0$ do the track variations vanish, i.e.,

$$\frac{\partial t}{\partial z} = 0 .$$

Because the vertical displacement is

$$z = -l_1\sin(\phi_1) \tag{31.3}$$

it follows that

$$t = t_0 - 2l_1\left[1-\sqrt{1-\left(\frac{z}{l_1}\right)^2}\right] . \tag{31.4}$$

In the skew-symmetrical roll mode, the relationship between ϕ and ϕ_1 is

$$\tan\left(\phi\right) = \frac{l_1\sin\left(\phi_1\right)}{d+d_1+l_1\cos(\phi_1)} \tag{31.5}$$

and the track is

$$t = 2\frac{\left[d+d_1+l_1\cos(\phi_1)\right]}{\cos\left(\phi\right)} . \tag{31.6}$$

Equation (31.5) may be inverted, producing an equation allowing ϕ_1 to be computed as a function of ϕ,

$$\tan^2\left(\frac{\phi_1}{2}\right) - 2\frac{l_1}{(d+d_1-l_1)\tan(\phi)}\tan\left(\frac{\phi_1}{2}\right) + \frac{d+d_1+l_1}{d+d_1-l_1} = 0. \tag{31.7}$$

In the ideal case where $d + d_1 = 0$, it follows that

$$\phi_1 = \phi \ , \tag{31.8}$$

and the track remains constant even for large values of the roll angle

$$\frac{\partial t}{\partial \phi} = 0 \ ;$$

otherwise the track remains constant only for small deviations from the symmetrical condition.

As already stated, the roll center remains on the ground only if in the reference condition the upper and lower links are horizontal, that is, if angle ϕ_1 and ϕ_2 have equal moduli and opposite signs. If, on the contrary, the symmetrical reference condition is characterized by positive values of ϕ_1 and ϕ_2 (the body is in a lower position with respect to the situation mentioned above), the roll center is below the road surface and vice-versa. These considerations are based on the assumption that the tire can be considered as a rigid disk; if, on the contrary, the compliance of the tire is accounted for, the position of the roll center is lower. If the transversal profile of the tires is curved, so that in roll motion they roll sideways on the ground, the roll center remains on the ground but is displaced sideways, outside the symmetry plane of the tire.

If the vehicle is controlled so that the local vertical remains in the symmetry plane, the load on the suspension changes with the roll angle (if, for instance, $\phi = 45°$, the centrifugal force is equal to the weight. The load is then equal to the static load multiplied by $\sqrt{2} \approx 1,4$). The suspension is compressed with increasing ϕ and the roll center goes deeper in the ground. To prevent this from occurring, devices able to control the compression of the suspensions must be used.

If the direction of the upper and lower links of the suspension is important in the kinematics of the suspension, the direction of the links modelling the vehicle body and the wheel hub is immaterial. The suspensions of Figs. 31.2a and 31.2d behave in the same way.

31.1.3 Tilting control

Consider a vehicle equipped with a tilting control system. Assume that such a device is integrated with the suspension springs, as shown in Fig. 31.3a: A rotary actuator with axis at point C rotates the arm CB to which the suspension springs AB and A′B are connected. Consider the rotation ϕ_c of the actuator arm as the control variable.

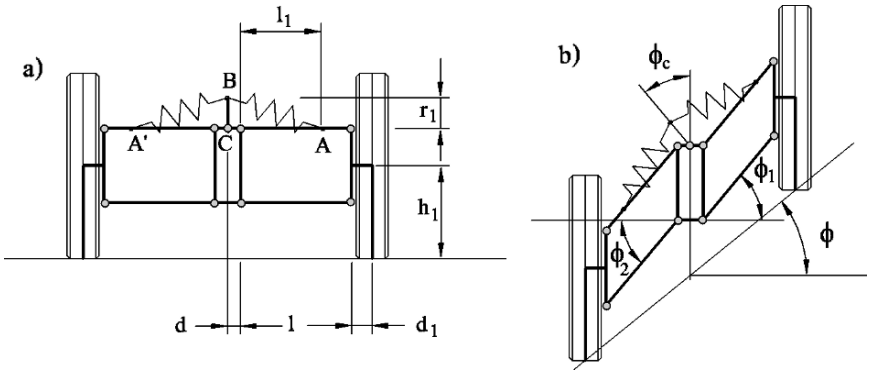

FIGURE 31.3. Sketch of the control of the transversal parallelograms suspension.

Assuming angles ϕ_i as positive when the suspensions move upwards with respect to the body, the coordinates of points A, A′ and B in a system with origin in C and whose axes are parallel to the y and z axes are

$$(\mathrm{A}-\mathrm{C}) = \left\{ \begin{array}{c} d + l_2 \cos(\phi_1) \\ l_2 \sin(\phi_1) \end{array} \right\} , \quad (\mathrm{A}'-\mathrm{C}) = \left\{ \begin{array}{c} -d - l_2 \cos(\phi_2) \\ l_2 \sin(\phi_2) \end{array} \right\} , \tag{31.9}$$

$$(\mathrm{B}-\mathrm{C}) = \left\{ \begin{array}{c} -r_1 \sin(\phi_c) \\ r_1 \cos(\phi_c) \end{array} \right\} . \tag{31.10}$$

The length of the springs is then

$$\begin{aligned} \overline{\mathrm{A}-\mathrm{B}} &= l_R = \sqrt{\beta_1 + \beta_2 \cos(\phi_1) + \beta_3 \sin(\phi_c) - \beta_4 \sin(\phi_1 - \phi_c)} , \\ \overline{\mathrm{A}'-\mathrm{B}} &= l_L = \sqrt{\beta_1 + \beta_2 \cos(\phi_2) - \beta_3 \sin(\phi_c) - \beta_4 \sin(\phi_2 + \phi_c)} , \end{aligned} \tag{31.11}$$

where subscripts L and R designate the left and right suspensions and

$$\begin{array}{ll} \beta_1 = d^2 + r_1^2 + l_2^2 , & \beta_3 = 2dr_1 , \\ \beta_2 = 2dl_2 , & \beta_4 = 2l_2 r_1 . \end{array} \tag{31.12}$$

The length of the springs in the reference condition ($\phi_1 = \phi_2 = \phi_c = 0$) is

$$l_0^2 = l_{0L}^2 = l_{0R}^2 = \beta_1 + \beta_2 . \tag{31.13}$$

First consider the springs as rigid bodies. The relationships yielding angles $\phi_1$and ϕ_2 as functions of ϕ_c may be obtained equating l_R and l_L to l_0 :

$$\begin{aligned} -\beta_2 + \beta_2 \cos(\phi_1) + \beta_3 \sin(\phi_c) - \beta_4 \sin(\phi_1 - \phi_c) = 0 , \\ -\beta_2 + \beta_2 \cos(\phi_2) - \beta_3 \sin(\phi_c) - \beta_4 \sin(\phi_2 + \phi_c) = 0 . \end{aligned} \tag{31.14}$$

Equations (31.14) may be solved in $\phi_1$and ϕ_2 obtaining

$$\tan\left(\frac{\phi_1}{2}\right) = \frac{\beta_4 \cos(\phi_c) - \sqrt{\beta_4^2 - \beta_3^2 \sin^2(\phi_c) + 2\beta_2(\beta_3 + \beta_4)\sin(\phi_c)}}{(\beta_3 - \beta_4)\sin(\phi_c) - 2\beta_2} , \tag{31.15}$$

$$\tan\left(\frac{\phi_2}{2}\right) = \frac{\beta_4 \cos(\phi_c) - \sqrt{\beta_4^2 - \beta_3^2 \sin^2(\phi_c) - 2\beta_2(\beta_3 + \beta_4)\sin(\phi_c)}}{(\beta_4 - \beta_3)\sin(\phi_c) - 2\beta_2} . \tag{31.16}$$

A rotation ϕ_c causes not only a rolling motion, but in general produces a displacement in the z direction as well. An exception is the case with $d = 0$ and thus $\beta_2 = \beta_3 = 0$. In this case

$$\phi_1 = -\phi_2 = \phi_c . \tag{31.17}$$

Remark 31.2 *If $d = 0$ a rotation of the control actuator produces a roll rotation of the vehicle (skew-symmetrical mode) but no displacement in the z direction. This statement amounts to saying that the roll center remains on the ground for all roll angles. The center of mass obviously lowers, because the roll center is on the ground, but the suspension behaves like a motorcycle wheel.*

Example 31.1 *Consider a transversal parallelogram suspension with the following data: $d_1 = 81.5$ mm, $r_1 = 138$ mm, $l_1 = 414$ mm, $l_2 = 388$ mm.*

Compute angles ϕ_1 and ϕ_2 as functions of ϕ_c and the displacements of the roll center along the z axis for three values of d, namely 0, 25 and 50 mm.

The results, computed using the above mentioned equations, are shown in Fig. 31.4.

As expected, if $d = 0$ rotation ϕ_c causes rolling of the vehicle body about the roll center that remains on the ground. If, on the contrary, $d \neq 0$, ϕ_1 is not equal to ϕ_2 and a displacement along the z direction (positive, in the sense that the body moves in the direction of the positive z axis) occurs. This displacement may reach 100 mm for $d = 50$ mm and $\phi_c = 50°$.

The center of mass obviously moves downwards when the vehicle rolls, but less than when d is zero.

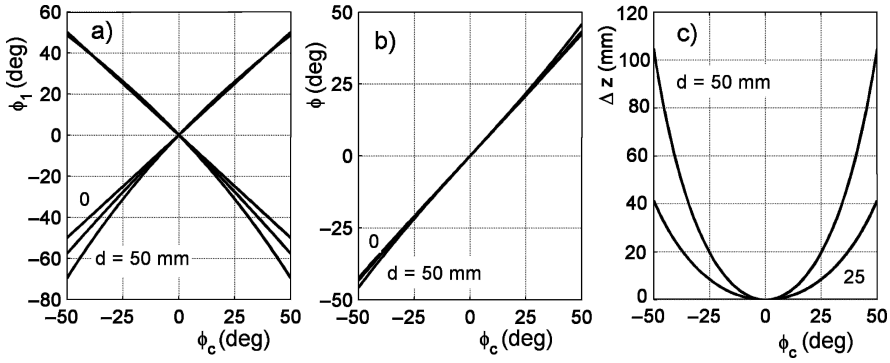

FIGURE 31.4. Transversal parallelograms suspension. a) Angles ϕ_1 and ϕ_2; b) roll angle ϕ and c) displacement in z direction of the roll center as a function of ϕ_c for three values of d: $d = 0$; $d = 25$ mm and $d = 50$ mm.

31.1.4 Suspension stiffness

The elastic potential energy of the springs, referred to the condition with $\phi_1 = \phi_2 = \phi_c = 0$, is

$$\mathcal{U}_m = \frac{1}{2}K\left[(l_R - l_0)^2 + (l_L - l_0)^2\right] \ , \tag{31.18}$$

where K is the stiffness of the springs.

First consider a suspension with $d = 0$. In this case $\phi_1 = -\phi_2$ and $\Delta z = 0$, when the springs are in the reference condition.

Let angles ϕ_1 and ϕ_2 vary about this condition by the small quantities $d\phi_1$ and $d\phi_2$. The roll angle and the displacement in the z direction may be obtained from Eq. (31.1):

$$\mathrm{tg}\,(\phi + d\phi) = \frac{l_1\left[\sin(\phi_1 + d\phi_1) - \sin(\phi_2 + d\phi_2)\right]}{2d_1 + l_1\left[\cos(\phi_1 + d\phi_1) + \cos(\phi_2 + d\phi_2)\right]} \ , \tag{31.19}$$

$$\Delta z + d\Delta z = l_1 \frac{d_1\left[\sin(\phi_1 + d\phi_1) + \sin(\phi_2 + d\phi_2)\right] + l_1 \sin(\phi_1 + d\phi_1 + \phi_2 + d\phi_2)}{d_1 + l_1\left[\cos(\phi_1 + d\phi_1) + \cos(\phi_2 + d\phi_2)\right]} \ . \tag{31.20}$$

Rolling motion

Assume that

$$d\phi_1 = -d\phi_2 \ . \tag{31.21}$$

Because angle $d\phi_1$ and $d\phi_2$ are small and $\Delta z = 0$, it follows that

$$\mathrm{tg}\,(\phi + d\phi) = \frac{l_1 \sin(\phi_1) + l_1 d\phi_1 \cos(\phi_1)}{d_1 + l_1 \cos(\phi_1) - l_1 d\phi_1 \sin(\phi_1)}, \tag{31.22}$$

$$d\Delta z = 0 \ . \tag{31.23}$$

The motion of the suspension is then rolling. Some computations are needed to obtain a relationship linking $d\phi$ to $d\phi_1$. They yield

$$\frac{d\phi_1}{d\phi} = \frac{d_1^2 + l_1^2 + 2d_1 l_1 \cos(\phi_1)}{l_1^2 + d_1 l_1 \cos(\phi_1)}. \tag{31.24}$$

The derivative $d\mathcal{U}_m/d\phi$, i.e. the restoring moment due to the spring system, is

$$\frac{d\mathcal{U}_m}{d\phi} = K\left[(l_R - l_0)\frac{dl_R}{d\phi_1} + (l_L - l_0)\frac{dl_L}{d\phi_2}\frac{d\phi_2}{d\phi_1}\right]\frac{d\phi_1}{d\phi} \tag{31.25}$$

where

$$\begin{aligned} \frac{\partial l_R}{\partial \phi_1} &= \frac{1}{2l_R}\left[-\beta_4 \cos(\phi_1 - \phi_c)\right] \ , \\ \frac{dl_L}{d\phi_2}\frac{d\phi_2}{d\phi_1} &= \frac{1}{2l_L}\left[\beta_4 \cos(\phi_1 - \phi_c)\right] \ . \end{aligned} \tag{31.26}$$

Because it has been assumed that $d = 0$, the above mentioned equations may be simplified, obtaining

$$\frac{\partial \mathcal{U}_m}{\partial \phi} = K l_2 r_1 l_0 \cos(\phi_1 - \phi_c) \frac{\partial \phi_1}{\partial \phi} \times$$
$$\times \frac{\sqrt{\beta_1 + \beta_4 \sin(\phi_1 - \phi_c)} - \sqrt{\beta_1 - \beta_4 \sin(\phi_1 - \phi_c)}}{\sqrt{\beta_1^2 - \beta_4^2 \sin^2(\phi_1 - \phi_c)}} \ . \tag{31.27}$$

As expected, if $\phi_1 = \phi_c$ the moment due to the springs vanishes, i.e.,

$$\frac{\partial \mathcal{U}_m}{\partial \phi} = 0 \ .$$

If the configuration is changed by a small angle about this equilibrium position, i.e. if

$$\phi_1 = \phi_c + \Delta\phi_1 \ ,$$

the rolling moment is

$$\frac{\partial \mathcal{U}_m}{\partial \phi} = K l_2 r_1 l_0 \frac{\partial \phi_1}{\partial \phi} \frac{\sqrt{\beta_1 + \beta_4 \Delta\phi_1} - \sqrt{\beta_1 - \beta_4 \Delta\phi_1}}{\beta_1} \tag{31.28}$$

and then

$$\frac{\partial \mathcal{U}_m}{\partial \phi} = 2K \frac{l_2^2 r_1^2}{l_2^2 + r_1^2} \frac{d_1^2 + l_1^2 + 2 d_1 l_1 \cos(\phi_1)}{l_1^2 + d_1 l_1 \cos(\phi_1)} \Delta\phi_1. \tag{31.29}$$

The rolling moment is proportional to angle $\Delta\phi_1$ and thus to the roll angle ϕ about the reference position. The rolling stiffness of the suspension is then

$$K_\phi = \frac{1}{\phi} \frac{\partial \mathcal{U}_m}{\partial \phi} = \frac{1}{\Delta\phi_1} \frac{\partial \phi_1}{\partial \phi} \frac{\partial \mathcal{U}_m}{\partial \phi}, \tag{31.30}$$

i.e.,

$$K_\phi = 2K \frac{l_2^2 r_1^2}{l_2^2 + r_1^2} \left(\frac{d_1^2 + l_1^2 + 2 d_1 l_1 \cos(\phi_1)}{l_1^2 + d_1 l_1 \cos(\phi_1)} \right)^2 . \tag{31.31}$$

If d_1 is also equal to zero,

$$\frac{\partial \phi_1}{\partial \phi} = 1$$

and the vehicle tilts, when there is no rolling moment, until an angle equal to ϕ_c has been reached.

Motion in the z direction

If the deformation is symmetrical, i.e. if

$$d\phi_1 = d\phi_2, \tag{31.32}$$

it is possible to write

$$\mathrm{tg}\,(\phi + \Delta\phi) = \mathrm{tg}\,(\phi)\,, \tag{31.33}$$

$$d\Delta z = l_1 d\phi_1 \frac{d_1 \cos(\phi_1) + l_1}{d_1 + l_1 \cos(\phi_1)}\ . \tag{31.34}$$

The derivative $d\mathcal{U}_m/d\Delta z$, i.e. the force in the z direction due to the suspension springs, is

$$\frac{d\mathcal{U}_m}{d\Delta z} = K\left[(l_R - l_0)\frac{dl_R}{d\phi_1} + (l_L - l_0)\frac{dl_L}{d\phi_2}\right]\frac{d\phi_1}{d\Delta z}. \tag{31.35}$$

Remembering that $\phi_1 = -\phi_2$, it follows that

$$\begin{aligned} \frac{dl_L}{d\phi_2} &= \frac{1}{2l_L}\left[\beta_4 \cos(\phi_1 - \phi_c)\right]\ , \\ \frac{d\phi_1}{d\Delta z} &= \frac{d_1 + l_1 \cos(\phi_1)}{l_1 d_1 \cos(\phi_1) + l_1^2}\ . \end{aligned} \tag{31.36}$$

This result may also be simplified, obtaining

$$\begin{aligned} \frac{\partial \mathcal{U}_m}{\partial \Delta z} &= K l_2 r_1 l_0 \cos(\phi_1 - \phi_c)\frac{\partial \phi_1}{\partial \Delta z}\times \\ &\times \frac{\sqrt{\beta_1 + \beta_4 \sin(\phi_1 - \phi_c)} - \sqrt{\beta_1 - \beta_4 \sin(\phi_1 - \phi_c)}}{\sqrt{\beta_1^2 - \beta_4^2 \sin^2(\phi_1 - \phi_c)}}\ . \end{aligned} \tag{31.37}$$

Because condition $\phi_1 = \phi_c$ was assumed to be an equilibrium condition, the force in the z direction vanishes if $\phi_1 = \phi_c$. Operating in the same way as a rolling condition, assuming that

$$\phi_1 = \phi_c + \Delta\phi_1\ ,$$

the value of the force in the z direction is obtained:

$$\frac{\partial \mathcal{U}_m}{\partial \Delta z} = 2K\frac{l_2^2 r_1^2}{l_2^2 + r_1^2}\frac{d_1 + l_1 \cos(\phi_1)}{l_1 d_1 \cos(\phi_1) + l_1^2}\Delta\phi_1. \tag{31.38}$$

The force in the z direction is then proportional to angle $\Delta\phi_1$ and thus to the displacement Δz. The stiffness of the suspension in the z direction is then

$$K_z = \frac{1}{\Delta z}\frac{\partial \mathcal{U}_m}{\partial \Delta z} = \frac{1}{\Delta\phi_1}\frac{\partial \phi_1}{\partial \Delta z}\frac{\partial \mathcal{U}_m}{\partial \Delta z}\ , \tag{31.39}$$

i.e.,

$$K_z = 2K\frac{l_2^2 r_1^2}{l_2^2 + r_1^2}\left(\frac{d_1 + l_1 \cos(\phi_1)}{l_1 d_1 \cos(\phi_1) + l_1^2}\right)^2\ . \tag{31.40}$$

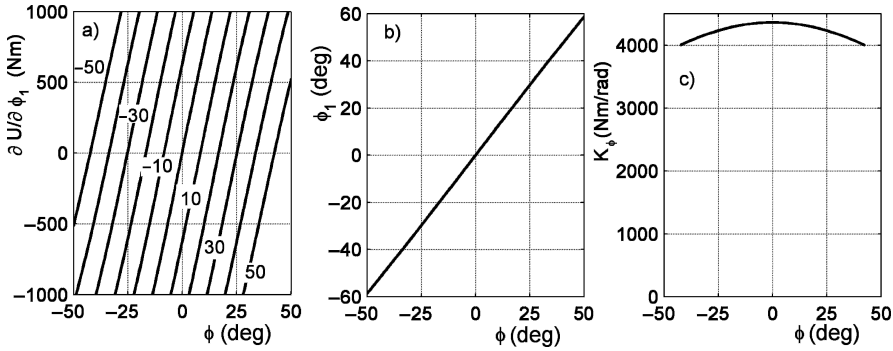

FIGURE 31.5. Transversal parallelograms suspension. a): Restoring moment due to the suspension springs versus the roll angle ϕ for various values of the control variable ϕ_c. b): Relationship between ϕ and ϕ_c. c): Stiffness for small roll oscillations about the static equilibrium condition.

Example 31.2 *Consider a transversal parallelogram suspension with the following data:* $d = 0$, $d_1 = 81.5$ *mm,* $r_1 = 138$ *mm,* $l_1 = 414$ *mm,* $l_2 = 388$ *mm.*

Compute the relationship linking ϕ *to* ϕ_1 *and plot the restoring moment due to the suspension springs* $\partial \mathcal{U}_m/\partial\phi$ *versus* ϕ*, for various values of* ϕ_c *and the stiffness of the suspension* K_ϕ *versus* ϕ_c*.*

The results are reported in Fig. 31.5.

From Fig. 31.5a it is clear that the restoring moment $\partial \mathcal{U}_m/\partial\phi$ *is linear with the roll angle* ϕ*, while the stiffness depends only slightly on the position about which the motion occurs (Fig. 31.5c). Also the dependence of* ϕ_1 *from* ϕ *is almost linear, as shown by Fig. 31.5b. Because* $d = 0$*, it follows that in the equilibrium condition* $\phi_1 = \phi_c$*.*

31.1.5 Roll damping of the suspension

Consider a damper system made by two shock absorbers located in parallel to the springs between points A and B and points A′ and B.

The dissipation function of the suspension is then

$$\mathcal{F} = \frac{1}{2}c\left\{\left[\frac{d\left(\overline{\mathrm{A}-\mathrm{B}}\right)}{dt}\right]^2 + \left[\frac{d\left(\overline{\mathrm{A}'-\mathrm{B}}\right)}{dt}\right]^2\right\} . \tag{31.41}$$

Remembering that lengths $l_D = \left(\overline{\mathrm{A}-\mathrm{B}}\right)$ and $l_L = \left(\overline{\mathrm{A'}-\mathrm{B}}\right)$ are functions of ϕ_c and ϕ_1, the dissipation function can be computed as

$$\mathcal{F} = \frac{1}{2}c\left\{\left[\left(\frac{\partial l_R}{\partial\phi_1}\frac{\partial\phi_1}{\partial\phi}\dot{\phi} + \frac{\partial l_R}{\partial\phi_c}\dot{\phi}_c\right)\right]^2 + \left[\left(\frac{\partial l_L}{\partial\phi_1}\frac{\partial\phi_1}{\partial\phi}\dot{\phi} + \frac{\partial l_L}{\partial\phi_c}\dot{\phi}_c\right)\right]^2\right\} . \tag{31.42}$$

The previous equation may be written in the form

$$\mathcal{F} = \frac{1}{2}\left(c_{11}\dot{\phi}^2 + c_{22}\dot{\phi}_c^2 + 2c_{12}\dot{\phi}\dot{\phi}_c\right) , \tag{31.43}$$

where

$$c_{11} = c\left[\left(\frac{\partial l_R}{\partial \phi_1}\right)^2 + \left(\frac{\partial l_L}{\partial \phi_1}\right)^2\right]\left(\frac{\partial \phi_1}{\partial \phi}\right)^2 ,$$

$$c_{12} = c\left(\frac{\partial l_R}{\partial \phi_1}\frac{\partial \phi_1}{\partial \phi}\frac{\partial l_R}{\partial \phi_c} + \frac{\partial l_L}{\partial \phi_1}\frac{\partial \phi_1}{\partial \phi}\frac{\partial l_L}{\partial \phi_c}\right) , \tag{31.44}$$

$$c_{22} = c\left[\left(\frac{\partial l_R}{\partial \phi_c}\right)^2 + \left(\frac{\partial l_2}{\partial \phi_c}\right)^2\right] .$$

Some of the derivatives are reported in Eq. 31.26; the others are

$$\frac{\partial l_R}{\partial \phi_c} = -\frac{\partial l_L}{\partial \phi_c} = \frac{1}{2l_L}\left[\beta_3 \cos(\phi_c) + \beta_4 \cos(\phi_1 - \phi_c)\right] . \tag{31.45}$$

With the control locked, i.e. with $\dot{\phi}_c = 0$, the damping coefficient of the suspension coincides with c_{11}.

If

$$d = 0 ,$$

it can immediately be derived that

$$c_{11} = c_{22} = -c_{12} = k\frac{c}{K} , \tag{31.46}$$

where k is the roll stiffness of the suspension, while c and K are the characteristics of the damper and the spring.

Example 31.3 *Compute the rolling damping coefficient of the suspension of the previous example, with locked controls, as a function of the static equilibrium position.*

The result is shown in Fig. 31.6. The linearized characteristics of the suspension depend little on the position, in terms of damping.

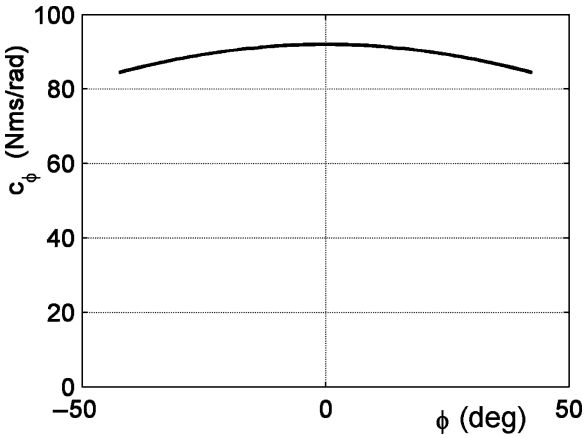

FIGURE 31.6. Damping cefficient of the suspension of the previous example for small movements about the equilibrium position.

31.2 LINEARIZED RIGID BODY MODEL

The simplest model for a tilting body vehicle is one with four degrees of freedom. It may be obtained from the model with 10 degrees of freedom of Fig. 29.3 (Section 29.2.2), locking the degrees of freedom θ and Z of the sprung mass and the symmetrical motions of the suspensions.

In the case of a two-wheeled vehicle, the kinematics is much simplified because:

- the mid-plane of the wheels remains parallel to the symmetry plane of the vehicle (actually coinciding with it);
- the roll axis is on the ground and in a fixed position, at least as a first approximation, if the effect of the transversal profile of the tires is neglected.

These considerations do not hold in the case of tilting body vehicles with more than two wheels. The roll axis is determined by the characteristics of the suspensions or by the position of a true cylindrical hinge: In the first case the very concept of a roll is inappropriate because of the large roll angles vehicles of this type can manage. The roll axis is an axis of instantaneous rotation, one that has no meaning in case of large rotations.

Assume that the suspensions are designed so that the mid-plane of the wheels remains parallel to the symmetry plane of the vehicle and the roll axis remains on the ground, at the intersection of the symmetry plane and the ground plane, as in simplified motorcycle models (See Appendix B).

The roll axis now coincides with the x^*-axis of the $x^*y^*z^*$ reference frame, seen in the previous section (Fig. 31.7). In this case the generalized coordinates for translations are the coordinates X_H, Y_H (coordinate Z_H vanishes) of point H, instead of the coordinates of the center of mass. Point H is on the ground, on the perpendicular to the roll axis passing through the center of mass G. Such coordinates are defined in the inertial reference frame $OX_iY_iZ_i$. To simplify the notation, subscript H will be dropped ($X = X_H$ and $Y = Y_H$).

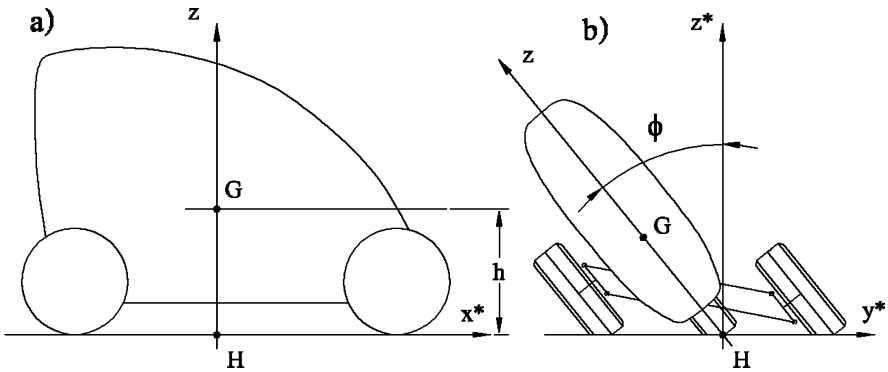

FIGURE 31.7. Reference frames for the sprung mass and definition of point H.

The generalized coordinates for rotations are the yaw angle ψ and the roll angle ϕ. As usual, the assumption of small angles (particularly for the sideslip angle β) allows the component of the velocity v_{x^*} to be confused with the forward velocity V. Angular velocities $\dot{\psi}$ and $\dot{\phi}$ will be considered small quantities as well.

31.2.1 Kinetic and potential energy

Because the pitch rotation is not included in the model, the roll axis is horizontal. The rotation matrix allowing us to change from the body-fixed frame Gxyz to the inertial frame $X_iY_iZ_i$ is

$$\mathbf{R} = \mathbf{R}_1\mathbf{R}_2 \ , \tag{31.47}$$

where

$$\mathbf{R}_1 = \begin{bmatrix} \cos(\psi) & -\sin(\psi) & 0 \\ \sin(\psi) & \cos(\psi) & 0 \\ 0 & 0 & 1 \end{bmatrix} \ , \ \mathbf{R}_2 = \begin{bmatrix} 1 & 0 & 0 \\ 0 & \cos(\phi) & -\sin(\phi) \\ 0 & \sin(\phi) & \cos(\phi) \end{bmatrix} \ .$$

The derivative of the rotation matrix is

$$\dot{\mathbf{R}} = \dot{\mathbf{R}}_1\mathbf{R}_2 + \mathbf{R}_1\dot{\mathbf{R}}_2 \ . \tag{31.48}$$

The components of the angular velocity in the direction of the body-fixed axes are linked with the derivatives of the coordinates by the equation

$$\begin{Bmatrix} \Omega_x \\ \Omega_y \\ \Omega_z \end{Bmatrix} = \begin{bmatrix} 1 & 0 \\ 0 & \sin(\phi) \\ 0 & \cos(\phi) \end{bmatrix} \begin{Bmatrix} \dot{\phi} \\ \dot{\psi} \end{Bmatrix} \ . \tag{31.49}$$

The vector of the generalized coordinates is

$$\mathbf{q} = \begin{bmatrix} X & Y & \phi & \psi \end{bmatrix}^T \ . \tag{31.50}$$

The generalized velocities for translational degrees of freedom are the components of the velocity in the $x^*y^*z^*$ frame. The derivatives of coordinates ϕ and ψ, that will be referred to as v_ϕ and v_ψ, will be used for the rotational degrees of freedom. The generalized velocities are then

$$\mathbf{w} = \begin{bmatrix} v_x & v_y & v_\phi & v_\psi \end{bmatrix}^T \ . \tag{31.51}$$

The relationship between generalized velocities and derivatives of the generalized coordinates may be written in the usual form

$$\mathbf{w} = \mathbf{A}^T\dot{\mathbf{q}} \ , \tag{31.52}$$

where matrix $\mathbf{A}^2$ is

$$\mathbf{A} = \begin{bmatrix} \cos(\psi) & -\sin(\psi) & 0 & 0 \\ \sin(\psi) & \cos(\psi) & 0 & 0 \\ 0 & 0 & 1 & 0 \\ 0 & 0 & 0 & 1 \end{bmatrix} . \tag{31.53}$$

Because in this case $\mathbf{A}$ is a rotation matrix, the inverse transformation is

$$\dot{\mathbf{q}} = \mathbf{B}\mathbf{w} = \mathbf{A}\mathbf{w} .$$

The vector defining the position of the center of the sprung mass $\mathrm{G_S}$ with respect to point H is, in the body-fixed frame,

$$\mathbf{r}_1 = h \begin{bmatrix} 0 & 0 & 1 \end{bmatrix}^T . \tag{31.54}$$

In the inertial frame the position of the same point is

$$(\overline{\mathrm{G_S}-\mathrm{O'}}) = (\overline{\mathrm{H}-\mathrm{O'}}) + \mathbf{R}\mathbf{r}_1. \tag{31.55}$$

Because $\mathbf{r}_1$ is constant, the velocity of point $\mathrm{G_S}$ is

$$\mathbf{V}_{\mathrm{G_S}} = \begin{bmatrix} \dot{X} & \dot{Y} & 0 \end{bmatrix}^T + \dot{\mathbf{R}}\mathbf{r}_1 , \tag{31.56}$$

i.e.

$$\mathbf{V}_{\mathrm{G_S}} = \mathbf{R}_1\mathbf{V} + \dot{\mathbf{R}}\mathbf{r}_1 , \tag{31.57}$$

and then the translational kinetic energy of the sprung mass is

$$\mathcal{T}_t = \frac{1}{2}m\left(\mathbf{V}^T\mathbf{V} + \mathbf{r_1}^T\dot{\mathbf{R}}^T\dot{\mathbf{R}}\mathbf{r_1} + 2\mathbf{V}^T\mathbf{R}_1^T\dot{\mathbf{R}}\mathbf{r_1}\right) . \tag{31.58}$$

Because plane xz is a symmetry plane for the sprung mass, its inertia tensor is

$$\mathbf{J} = \begin{bmatrix} J_x & 0 & -J_{xz} \\ 0 & J_y & 0 \\ -J_{xz} & 0 & J_z \end{bmatrix} . \tag{31.59}$$

The rotational kinetic energy of the sprung mass is then

$$\mathcal{T}_r = \frac{1}{2}\mathbf{\Omega}^T\mathbf{J}\mathbf{\Omega} . \tag{31.60}$$

By performing the relevant computations, expressing the components of the angular velocity as functions of the derivatives of the coordinates and neglecting the terms containing powers of small quantities higher than the second, it follows that

[2]Matrix $\mathbf{A}$ here defined must not be confused with the dynamic matrix in the state space, which is also usually referred to as $\mathbf{A}$.

$$\begin{aligned}\mathcal{T} = \tfrac{1}{2}m\left(v_x^2 + v_y^2\right) + \tfrac{1}{2}J_x^*\dot{\phi}^2 + \tfrac{1}{2}\left[J_y^*\sin^2(\phi) + J_z\cos^2(\phi)\right]\dot{\psi}^2 \\ -J_{xz}\cos(\phi)\,\dot{\psi}\,\dot{\phi} + mv_x\,h\dot{\psi}\sin(\phi) - mv_y h\dot{\phi}\cos(\phi)\ ,\end{aligned} \tag{31.61}$$

where

$$J_x^* = mh^2 + J_x\ ,\ J_y^* = mh^2 + J_y\ .$$

The height of the center of mass of the sprung mass on the ground is

$$Z_G = h\cos(\phi)\ , \tag{31.62}$$

and then the gravitational potential energy of the vehicle is

$$\mathcal{U}_g = mgh\cos(\phi)\ . \tag{31.63}$$

The potential energy reduces to its gravitational components in the case of a two-wheeled vehicle. In vehicles with three or more wheels with suspensions, the elastic potential energy due to the springs must also be accounted for. In the following study the elastic potential energy will be assumed to depend only on the roll angle; however, it is not a simple quadratic function as in the case of linearized models, because the roll angle may be large. In general, it is possible to state that

$$\mathcal{U}_s = \mathcal{U}_s(\phi)\ . \tag{31.64}$$

If the vehicle has suspensions for the roll motion and the latter are provided with dampers, a dissipative function may be defined,

$$\mathcal{F} = \mathcal{F}\left(\phi, \dot{\phi}\right)\ . \tag{31.65}$$

It must be expressly stated that the equations above were obtained without resorting to the assumption that all variables of motion, with the exception of the roll angle ϕ, are small quantities. Moreover, these equations are more general and hold even if the roll axis does not lie on the ground or is exactly horizontal, provided that the angle between the roll axis and the ground plane (referred to as θ_0 in the previous chapters) is a small angle and that h is the distance between the center of mass and the roll axis instead of its height on the ground.

31.2.2 Rotation of the wheels

Because it has been assumed that, as in the case of vehicles with two wheels (see Appendix B), the rotation axis of the wheels is perpendicular to the symmetry plane, the absolute angular velocity of the ith wheel expressed in the reference frame of the sprung mass is

$$\Omega_i = \left\{\begin{array}{c}\Omega_x \\ \Omega_y + \dot{\chi}_i \\ \Omega_z\end{array}\right\}\ , \tag{31.66}$$

where χ_i is the rotation angle of the wheel.

If the wheel steers, the reference frame of the ith wheel will be rotated by a steering angle δ_i about an axis, the kingpin axis, that in general is not perpendicular to the ground. If $\mathbf{e}_k$ is the unit vector of the kingpin axis (its components will be indicated as x_k, y_k and z_k)[3], the rotation matrix $\mathbf{R}_{ki}$ to rotate the reference frame fixed to the sprung mass in such a way that its z axis coincides with the kingpin axis of the ith wheel is

$$\mathbf{R}_{ki} = \frac{1}{\sqrt{x_k^2 + z_k^2}} \begin{bmatrix} z_k & -x_k y_k & x_k\sqrt{x_k^2 + z_k^2} \\ 0 & \left(x_k^2 + z_k^2\right) & y_k\sqrt{x_k^2 + z_k^2} \\ -x_k & -z_k y_k & z_k\sqrt{x_k^2 + z_k^2} \end{bmatrix} . \tag{31.67}$$

The caster and the inclination angles of the kingpin are usually small in suspensions for two-wheeled axles and, as seen in the previous sections, rotation matrix $\mathbf{R}_{ki}$ reduces to

$$\mathbf{R}_{ki} \approx \begin{bmatrix} 1 & 0 & x_k \\ 0 & 1 & y_k \\ -x_k & -y_k & 1 \end{bmatrix} , \tag{31.68}$$

where x_k and y_k are the caster and the inclination angles (the latter changed in sign) of the kingpin axis. For symmetry reasons

$$x_{k_D} = x_{k_S} \ , \quad y_{k_D} = -y_{k_S} \ . \tag{31.69}$$

In motorcycles y_k is zero, while the caster angle x_k may be large. In the following parts of this section this possibility will not be considered.

A further rotation matrix

$$\mathbf{R}_{4i} = \begin{bmatrix} \cos(\delta_i) & -\sin(\delta_i) & 0 \\ \sin(\delta_i) & \cos(\delta_i) & 0 \\ 0 & 0 & 1 \end{bmatrix} \tag{31.70}$$

can be defined for the rotation of the wheel about the kingpin axis.

The angular velocity of the wheel in the reference frame of the sprung mass is then

$$\Omega_{wi} = \mathbf{\Omega} + \dot{\delta}_i \mathbf{R}_{ki}\mathbf{e}_3 + \dot{\chi}_i \mathbf{R}_{ki}\mathbf{R}_{4i}\mathbf{R}_{ki}^T\mathbf{e}_2 \ . \tag{31.71}$$

Eq. (31.71) must be premultiplied by $(\mathbf{R}_{ki}\mathbf{R}_{4i}\mathbf{R}_{ki}^T)^T$ to obtain the angular velocity of the wheel in its own reference frame. Remembering that $\mathbf{R}_{4i}\mathbf{e}_3 = \mathbf{e}_3$, it follows that

$$\Omega_{wi} = \dot{\chi}_i \mathbf{e}_2 + \dot{\delta}_i \boldsymbol{\alpha}_1 + \boldsymbol{\alpha}_2 \mathbf{\Omega} \ , \tag{31.72}$$

where

$$\boldsymbol{\alpha}_1 = \mathbf{R}_{ki}\mathbf{e}_3 \ , \quad \boldsymbol{\alpha}_2 = \mathbf{R}_{ki}\mathbf{R}_{4i}^T\mathbf{R}_{ki}^T \ . \tag{31.73}$$

[3]Obviously $\sqrt{x_k^2 + y_k^2 + z_k^2} = 1$.

Because the wheel is a gyroscopic body (two of its principal moments of inertia are equal) with a principal axis of inertia coinciding with its rotation axis, its inertia matrix is diagonal and has the form

$$\mathbf{J}_{wi} = \mathrm{diag}\left(\begin{bmatrix} J_{ti} & J_{pi} & J_{ti} \end{bmatrix}\right) , \tag{31.74}$$

where J_{pi} is the polar moment of inertia and J_{ti} is the transversal moment of inertia of the ith wheel.

The rotational kinetic energy of the ith wheel is

$$\begin{aligned} \mathcal{T}_{wri} = \tfrac{1}{2}\boldsymbol{\Omega}^T\boldsymbol{\alpha}_2^T\mathbf{J}_{wi}\boldsymbol{\alpha}_2\boldsymbol{\Omega} + \tfrac{1}{2}\dot{\chi}_i^2\mathbf{e}_2^T\mathbf{J}_{wi}\mathbf{e}_2 + \tfrac{1}{2}\dot{\delta}_i^2\boldsymbol{\alpha}_1^T\mathbf{J}_{wi}\boldsymbol{\alpha}_1 + \\ +\dot{\chi}_i\dot{\delta}_i\mathbf{e}_2^T\mathbf{J}_{wi}\boldsymbol{\alpha}_1 + \dot{\chi}_i\mathbf{e}_2^T\mathbf{J}_{wi}\boldsymbol{\alpha}_2\boldsymbol{\Omega} + \dot{\delta}_i\boldsymbol{\alpha}_1^T\mathbf{J}_{wi}\boldsymbol{\alpha}_2\boldsymbol{\Omega} \ . \end{aligned} \tag{31.75}$$

By performing the relevant computations and assuming that all variables of motion, except for ϕ and χ_i, are small, it follows that

$$\begin{aligned} \mathcal{T}_{wri} = \tfrac{1}{2}J_{ti}\dot{\phi}^2 + \tfrac{1}{2}\left[J_{pi}\sin^2(\phi) + J_{ti}\cos^2(\phi)\right]\dot{\psi}^2 + \tfrac{1}{2}J_{pi}\dot{\chi}_i^2 + \\ +\tfrac{1}{2}\dot{\delta}_i^2 J_{ti} - J_{pi}\delta_i\dot{\phi}\dot{\chi}_i + J_{pi}\, y_{ki}\dot{\chi}_i\dot{\delta}_i + J_{pi}\,\sin(\phi)\,\dot{\psi}\dot{\chi}_i + J_{ti}\cos(\phi)\,\dot{\psi}\dot{\delta}_i \ . \end{aligned} \tag{31.76}$$

The first two terms express the rotational kinetic energy of the wheel due to angular velocity of the vehicle and thus have already been included in the expression of the kinetic energy of the vehicle, if the moments of inertia of the wheels have been taken into account when computing the total inertia.

31.2.3 Lagrangian function

The Lagrangian function of the vehicle is then

$$\begin{aligned} \mathcal{L} = \tfrac{1}{2}m\left(v_x^2 + v_y^2\right) + \tfrac{1}{2}J_x^*\dot{\phi}^2 + \tfrac{1}{2}\left[J_y^*\sin^2(\phi) + J_z\cos^2(\phi)\right]\dot{\psi}^2 + \\ -J_{xz}\cos(\phi)\,\dot{\psi}\,\dot{\phi} + mv_x\,h\dot{\psi}\sin(\phi) - mv_y h\dot{\phi}\cos(\phi) + \\ +\textstyle\sum_{\forall i}\left[\tfrac{1}{2}J_{pi}\dot{\chi}_i^2 + \tfrac{1}{2}\dot{\delta}_i^2 J_{ti} - J_{pi}\delta_i\dot{\phi}\dot{\chi}_i + J_{pi}\, y_{ki}\dot{\chi}_i\dot{\delta}_i + \right. \\ \left. +J_{pi}\,\sin(\phi)\,\dot{\psi}\dot{\chi}_i + J_{ti}\cos(\phi)\,\dot{\psi}\dot{\delta}_i\right] - mgh\cos(\phi) - \mathcal{U}_s(\phi) \ . \end{aligned} \tag{31.77}$$

If the longitudinal slip of the wheels is neglected, their angular velocity is

$$\dot{\chi}_i = \frac{V}{R_{e_i}} \ . \tag{31.78}$$

In a way similar to our treatment of the four-wheeled vehicle, the kinetic energy linked with the steering velocity $\dot{\delta}$ may be neglected in the locked control motion. The Lagrangian reduces to

$$\begin{aligned} \mathcal{L} = \tfrac{1}{2}m_{at}V^2 + \tfrac{1}{2}mv_y^2 + \tfrac{1}{2}J_x^*\dot{\phi}^2 + \tfrac{1}{2}\left[J_y^*\sin^2(\phi) + J_z\cos^2(\phi)\right]\dot{\psi}^2 + \\ -J_{xz}\cos(\phi)\,\dot{\psi}\,\dot{\phi} + VJ_s\dot{\psi}\sin(\phi) - mv_y h\dot{\phi}\cos(\phi) + \\ -V\textstyle\sum_{\forall i}\frac{J_{pi}}{R_{e_i}}\delta_i\dot{\phi} - mgh\cos(\phi) - \mathcal{U}_s(\phi) \ , \end{aligned} \tag{31.79}$$

where

$$\begin{aligned} m_{at} &= m + \sum_{\forall i} \frac{J_{pi}}{R_{e_i}^2} \ , \quad J_s = m\,h + \sum_{\forall i} \frac{J_{pi}}{R_{e_i}} \ , \\ J_x^* &= mh^2 + J_x \ , \qquad J_y^* = mh^2 + J_y \ . \end{aligned}$$

The derivatives of the Lagrangian function are then

$$\frac{\partial \mathcal{L}}{\partial V} = m_{at} V + J_s \dot{\psi} \sin(\phi) \ , \tag{31.80}$$

$$\frac{\partial \mathcal{L}}{\partial v_y} = m v_y - m h \dot{\phi} \cos(\phi) \ , \tag{31.81}$$

$$\frac{\partial \mathcal{L}}{\partial \dot{\phi}} = J_x^* \dot{\phi} - J_{xz} \cos(\phi)\, \dot{\psi} - m v_y h \cos(\phi) - V \sum_{\forall i} \frac{J_{pi}}{R_{e_i}} \delta_i \ , \tag{31.82}$$

$$\frac{\partial \mathcal{L}}{\partial \dot{\psi}} = \left[J_y^* \sin^2(\phi) + J_z \cos^2(\phi) \right] \dot{\psi} - J_{xz} \cos(\phi)\ \dot{\phi} + V J_s h \sin(\phi) \ . \tag{31.83}$$

The derivative with respect to time of the derivatives with respect to the generalized velocities contains products that are themselves the products of two or more small quantities, and thus must be neglected in the linearization process. Also $\dot{V}$ may be considered as a small quantity, and then terms containing, for instance, product $\dot{V}\delta$ may be neglected. It then follows that

$$\frac{d}{dt}\left(\frac{\partial \mathcal{L}}{\partial V} \right) = m_{at} \dot{V} + J_s \ddot{\psi} \sin(\phi) \ , \tag{31.84}$$

$$\frac{d}{dt}\left(\frac{\partial \mathcal{L}}{\partial v_y} \right) = m \dot{v}_y - m h \ddot{\phi} \cos(\phi) \ , \tag{31.85}$$

$$\frac{d}{dt}\left(\frac{\partial \mathcal{L}}{\partial \dot{\phi}} \right) = J_x^* \ddot{\phi} - J_{xz} \cos(\phi)\, \ddot{\psi} - m \dot{v}_y h \cos(\phi) \ , \tag{31.86}$$

$$\begin{aligned} \frac{d}{dt}\left(\frac{\partial \mathcal{L}}{\partial \dot{\psi}} \right) = \left[J_y^* \sin^2(\phi) + J_z \cos^2(\phi) \right] \ddot{\psi} - J_{xz} \cos(\phi)\, \ddot{\phi} + \\ + J_s \dot{V} \sin(\phi) + J_s V\ \cos(\phi)\, \dot{\phi} \ , \end{aligned} \tag{31.87}$$

$$\frac{\partial \mathcal{L}}{\partial x^*} = \frac{\partial \mathcal{L}}{\partial y^*} = \frac{\partial \mathcal{L}}{\partial \psi} = 0 \ , \tag{31.88}$$

$$\frac{\partial \mathcal{L}}{\partial \phi} = J_s V \dot{\psi} \cos(\phi) + m g h \sin(\phi) - \frac{\partial \mathcal{U}_s(\phi)}{\partial \phi} \ . \tag{31.89}$$

31.2.4 Kinematic equations

Matrix $\mathbf{A}$ is what we have already seen for the model with 10 degrees of freedom, except that the last six rows and columns are not present here.

The equation of motion in the configuration space is

$$\frac{\partial}{\partial t}\left(\left\{\frac{\partial \mathcal{L}}{\partial w}\right\}\right) + \mathbf{B^T\Gamma}\left\{\frac{\partial \mathcal{L}}{\partial w}\right\} - \mathbf{B}^T\left\{\frac{\partial \mathcal{L}}{\partial q}\right\} + \left\{\frac{\partial \mathcal{F}}{\partial w}\right\} = \mathbf{B}^T\mathbf{Q} \ . \tag{31.90}$$

The column matrix $\mathbf{B}^T\mathbf{Q}$ containing the four components of the generalized forces vector will be computed later, when the virtual work of the forces acting on the system is described. In the following its elements will be written as Q_x, Q_y, Q_ϕ, Q_ψ.

As usual, the most difficult part is writing matrix $\mathbf{B^T\Gamma}$. By performing somewhat complex computations, following the procedure outlined in Appendix A, it follows that

$$\mathbf{B^T\Gamma} = \begin{bmatrix} \begin{bmatrix} 0 & -\dot{\psi} \\ \dot{\psi} & 0 \\ 0 & 0 \\ -v_y & v_x \end{bmatrix} & \mathbf{0}_{4\times 2} \end{bmatrix} \ .$$

By introducing the values of the derivatives and linearizing, it follows that

$$\mathbf{B}^T\mathbf{\Gamma}\left\{\frac{\partial \mathcal{L}}{\partial w}\right\} = \left\{\begin{array}{c} 0 \\ m_{at}V\dot{\psi} \\ 0 \\ V\left[-mh\dot{\phi}\cos(\phi) - v_y\sum_{\forall k}\left(J_{pr}\frac{1}{R_e^2}\right)\right] \end{array}\right\} \ . \tag{31.91}$$

Finally

$$\mathbf{B}^T\left\{\frac{\partial \mathcal{L}}{\partial q}\right\} = \left\{\frac{\partial \mathcal{L}}{\partial q}\right\} \ . \tag{31.92}$$

31.2.5 Equations of motion

First equation: longitudinal translation

$$m_{at}\dot{V} + J_s\ddot{\psi}\sin(\phi) = Q_x \ . \tag{31.93}$$

Second equation: lateral translation

$$m\dot{v}_y + m_{at}V\dot{\psi} - mh\ddot{\phi}\cos(\phi) = Q_y \ . \tag{31.94}$$

Third equation: roll rotation

$$\begin{aligned} J_x^* \ddot{\phi} - J_{xz} \cos(\phi) \ddot{\psi} - m\dot{v}_y h \cos(\phi) - J_s V \dot{\psi} \cos(\phi) + \\ -mgh \sin(\phi) + \frac{\partial \mathcal{U}_s(\phi)}{\partial \phi} + \frac{\partial \mathcal{F}(\phi, \dot{\phi})}{\partial \dot{\phi}} = Q_\phi \ . \end{aligned} \tag{31.95}$$

Fourth equation: yaw rotation

$$\begin{aligned} \left[J_y^* \sin^2(\phi) + J_z \cos^2(\phi) \right] \ddot{\psi} - J_{xz} \cos(\phi) \ddot{\phi} + \\ + J_s \dot{V} \sin(\phi) + V \cos(\phi) \dot{\phi} \sum_{\forall i} \frac{J_{pi}}{R_{e_i}} - V v_y \sum_{\forall k} \frac{J_{pi}}{R_{ei}^2} = Q_\psi \ . \end{aligned} \tag{31.96}$$

31.2.6 Sideslip angles of the wheels

The sideslip angles of the wheels may be computed from the components of the velocities of the centers of the contact areas of the wheels in the $x^* y^* z$ frame. If the roll axis lies on the ground, some simplifications may be introduced: The roll angle and the roll velocity do not appear in the expression of the velocity of the wheel-ground contact points, if the track variations due to roll are neglected. The expression of the sideslip angle coincides with that seen for the rigid vehicle, except for the term containing the steering angle. Assuming that the sideslip angle is small, it follows that

$$\alpha_k = \frac{v_y}{V} + \dot{\psi} \frac{x_{Pk}}{V} - \delta_k \cos(\phi) - \delta_k(\phi) \cos(\phi) \ , \tag{31.97}$$

where subscript k refers to the axle, because the two wheels of the same axle have the same sideslip angle.

The term $\cos(\phi)$ multiplying the steering angle is linked to the circumstance that the steering loses its effectiveness with increasing roll angle, and was computed assuming that the kingpin axis is, when the roll angle vanishes, essentially perpendicular to the ground. If it is not, the caster and inclination angles had to be taken into account, together with their variation with the roll angle. The term $\delta_k(\phi)$ is roll steer that, in case of large roll angles, may be too large to be linearized.

31.2.7 Generalized forces

The generalized forces Q_k to be introduced into the equations of motion include the forces due to the tires, the aerodynamic forces and possible forces applied on the vehicle by external agents.

The virtual displacement of the center of the contact area of the left (right) wheel of the kth axle is

$$\{\delta s_{Pk_{L(R)}}\}_{x^*y^*z} = \left\{ \begin{array}{c} \delta x^* - \delta\psi y_{Pk} \\ \delta y^* + \delta\psi x_{Pk} \\ 0 \end{array} \right\} , \tag{31.98}$$

where x_{Pk} and y_{Pk} are the coordinates of the center of the contact area in the reference frame $x^*y^*z^*$.

By writing as F_x^* and F_y^* the forces exerted by the tire in the direction of the x^* and y^* axes, assuming that the longitudinal forces acting on the wheels of the same axle are equal, the expression of the virtual work is

$$\delta\mathcal{L}_k = \delta x^* F_x^* + \delta y^* F_y^* + \delta\psi \left[F_y^* x_{Pk} + M_z \right] . \tag{31.99}$$

Because of the small steering angle, forces F_x^* and F_y^* will be confused in the following sections with the forces expressed in the reference frame of the wheel.

In a similar way, the virtual displacement of the center of mass for the computation of the aerodynamic forces is, in the $x^*y^*z^*$ frame,

$$\{\delta s_{G_S}\}_{x^*y^*z^*} = \left\{ \begin{array}{c} \delta x^* + h\sin(\phi)\,\delta\psi \\ \delta y^* - h\cos(\phi)\,\delta\phi \\ -h\sin(\phi)\,\delta\phi \end{array} \right\} . \tag{31.100}$$

The aerodynamic forces and moments are referred to the xyz frame and not to the $x^*y^*z^*$ frame. Force F_{za}, for example, lies in the symmetry plane of the vehicle and is not perpendicular to the road. In this way it may be assumed that aerodynamic forces do not depend on the roll angle ϕ. A rotation of the reference frame is then needed:

$$\left\{ \begin{array}{c} F_{xa}^* \\ F_{ya}^* \\ F_{za}^* \end{array} \right\} = \left\{ \begin{array}{c} F_{xa} \\ F_{ya}\cos(\phi) - F_{za}\sin(\phi) \\ F_{ya}\sin(\phi) + F_{za}\cos(\phi) \end{array} \right\} , \tag{31.101}$$

$$\left\{ \begin{array}{c} M_{xa}^* \\ M_{ya}^* \\ M_{za}^* \end{array} \right\} = \left\{ \begin{array}{c} M_{xa} \\ M_{ya}\cos(\phi) - M_{za}\sin(\phi) \\ M_{ya}\sin(\phi) + M_{za}\cos(\phi) \end{array} \right\} . \tag{31.102}$$

The virtual work of the aerodynamic forces and moments is then

$$\begin{aligned} \delta\mathcal{L}_a = F_{xa}\delta x^* + \left[F_{ya}\cos(\phi) - F_{za}\sin(\phi)\right]\delta y^* + \\ + \left(M'_{xa} - F_{ya}h\right)\delta\phi + \left[\left(F_{xa}h + M_{ya}\right)\sin(\phi) + M_{za}\cos(\phi)\right]\delta\psi . \end{aligned} \tag{31.103}$$

It then follows that

$$\mathbf{Q} = \left\{ \begin{array}{c} \sum_{\forall k} F_{xk} + F_{xa} \\ \sum_{\forall k} F_{yk} + F_{ya}\cos(\phi) - F_{za}\sin(\phi) \\ M'_{xa} - F_{ya}h \\ \sum_{\forall k}\left(F_y^* x_{Pk} + M_z\right) + \left(F_{xa}h + M_{ya}\right)\sin(\phi) + M_{za}\cos(\phi) \end{array} \right\} . \tag{31.104}$$

Because of the linearization of the model, forces F_{x_a} and F_{z_a} may be considered as constant, while F_{y_a}, M_{x_a} and M_{z_a} may be considered as linear with angle β_a, or if there is no side wind, angle β.

The force F_{yk} on the kth axle may be considered as a linear function of the sideslip angle and a more complex function of the camber angle, because the latter was assumed to coincide with the roll angle ϕ and is therefore not small. It then follows that

$$F_{ypk} = -C_k \alpha_k + F_{y\gamma k}(\phi) \ , \tag{31.105}$$

where both C_k and $F_{y\gamma k}(\phi)$ are referred to the whole axle.

In the following the camber thrust will be assumed to be linear with the camber angle, even for large values of the latter, and the side force will be written as

$$F_{ypk} = -C_k \alpha_k + C_{\gamma k}\phi \ . \tag{31.106}$$

This is doubtless an approximated expression, but it must be made if searching for closed form results. Roll steer will also be neglected.

31.2.8 Final form of the equations of motion

First equation: longitudinal translation

$$m_{at}\dot{V} + J_s\ddot{\psi}\sin(\phi) = F_{x1} + F_{x2} - \frac{1}{2}\rho V^2 S C_x \ . \tag{31.107}$$

Second equation: lateral translation

$$\begin{aligned} m\dot{v}_y + m_{at}V\dot{\psi} - mh\ddot{\phi}\cos(\phi) = [Y_v + \cos(\phi)\, Y_{v1}]\, v_y + Y_{\dot{\psi}}\dot{\psi} + \\ + Y_\phi \phi + \cos(\phi)\, Y_\delta \delta - \tfrac{1}{2}\rho V^2 S C_z \sin(\phi) + F_{y_e} \ , \end{aligned} \tag{31.108}$$

where

$$\begin{cases} Y_v = -\frac{1}{V}\sum_{\forall k} C_k \ , \\ Y_{v1} = \frac{1}{2}\rho V_a S (C_y)_{,\beta} \ , \\ Y_{\dot{\psi}} = -\frac{1}{V}\sum_{\forall k} x_{Pk} C_k \ , \\ Y_\phi = \sum_{\forall k} C_{\gamma k} \ , \\ Y_\delta = \sum_{\forall k} K'_k C_k \ . \end{cases} \tag{31.109}$$

Third equation: roll rotation

$$\begin{aligned} J_x^*\ddot{\phi} - J_{xz}\cos(\phi)\,\ddot{\psi} - m\dot{v}_y h\cos(\phi) - J_s V\dot{\psi}\cos(\phi) + \\ -mgh\sin(\phi) + \frac{\partial \mathcal{U}_s(\phi)}{\partial \phi} + \frac{\partial \mathcal{F}(\phi,\dot{\phi})}{\partial \dot{\phi}} = L_v v_y \ , \end{aligned} \tag{31.110}$$

where

$$L_v = \frac{1}{2}\rho V S\left[-h(C_y)_{,\beta} + t(C_{M_x})_{,\beta}\right] \ . \tag{31.111}$$

Fourth equation: yaw rotation

$$\begin{aligned}
&\left[J_y^* \sin^2(\phi) + J_z \cos^2(\phi)\right]\ddot{\psi} - J_{xz}\cos(\phi)\ddot{\phi} + \\
&+ J_s \dot{V}\ \sin(\phi) + V\cos(\phi)\,\dot{\phi}\sum_{\forall i}\tfrac{J_{pi}}{R_{e_i}} = \\
&= \left[N_v + \cos(\phi)\,Y_{v1}\right] v_y + N_{\dot{\psi}}\dot{\psi} + N_\phi \phi + \cos(\phi)\,N_\delta \delta + \\
&+ \tfrac{1}{2}\rho V^2 S(-hC_x + lC_{M_y})\sin(\phi) + M_{ze} \ ,
\end{aligned} \tag{31.112}$$

where

$$\begin{cases}
N_v = \frac{1}{V}\sum_{\forall k}\left[-x_{Pk}C_k + (M_{zk})_{,\alpha} + 2J_{pr}\left(\frac{V}{R_e}\right)^2\right] \ , \\
N_{v1} = \frac{1}{2}\rho V_a S l (C'_{M_z})_{,\beta} \ , \\
N_{\dot{\psi}} = \frac{1}{V}\sum_{\forall k}\left[-x_{Pk}^2 C_k + x_{r_k}(M_{z_k})_{,\alpha}\right] \ , \\
N_\phi = \sum_{\forall k} x_{rk} C_{\gamma k} \ , \\
N_\delta = \sum_{\forall k}\left[x_{Pk}K'_k C_k - (M_{zk})_{,\alpha}\right] \ .
\end{cases} \tag{31.113}$$

31.2.9 Steady-state equilibrium conditions

Consider a vehicle in which control of the roll angle is performed in such a way that the transversal load vanishes. The condition that must be stated is that the equilibrium to roll rotations is granted without the suspension exerting any roll torque.

In steady-state conditions accelerations $\dot{V}$, $\dot{v}_y$, $\ddot{\phi}$ and $\ddot{\psi}$ and velocity $\dot{\phi}$ vanish, and the condition in which the suspension exerts no roll torques is

$$\frac{\partial \mathcal{U}_s(\phi)}{\partial \phi} = \frac{\partial \mathcal{F}\left(\phi, \dot{\phi}\right)}{\partial \dot{\phi}} = 0 \ .$$

The equilibrium equation to roll becomes

$$-J_s V \dot{\psi}\cos(\phi) - mgh\sin(\phi) = L_v v_y \ . \tag{31.114}$$

In steady-state, the yaw velocity $\dot{\psi}$ is linked to the forward velocity V and to the radius of the path (which is circular) R by the usual relationship

$$\dot{\psi} = \frac{V}{R} \ , \tag{31.115}$$

and then the equilibrium equation reduces to

$$-J_s \frac{V^2}{R} \cos(\phi) - mgh \sin(\phi) = L_v v_y \ . \tag{31.116}$$

By introducing the value of J_s into the last equation, it follows that

$$\left(m\,h + \sum_{\forall i} \frac{J_{pi}}{R_{e_i}} \right) \frac{V^2}{R} \cos(\phi) + mgh \sin(\phi) + L_v v_y = 0 \ . \tag{31.117}$$

The third term, due to aerodynamic actions, is small when compared with the others and may, at least initially, be neglected. Eq. (31.117) then allows the steady-state roll angle to be computed:

$$\phi_0 = -\text{artg} \left[\frac{V^2}{Rg} \left(1 + \frac{1}{m\,h} \sum_{\forall i} \frac{J_{pi}}{R_{e_i}} \right) \right] \ , \tag{31.118}$$

which coincides with the expression obtained from the simplified ideal steering model.

31.2.10 Motion about the steady-state equilibrium position

Consider a vehicle working in a condition close to the above computed equilibrium condition. The roll angle may be expressed as

$$\phi = \phi_0 + \phi_1 \ ,$$

where ϕ_1 is a small angle. The trigonometric functions of the roll angle may then be approximated as

$$\begin{aligned} \sin(\phi_0 + \phi_1) &\approx \sin(\phi_0) + \phi_1 \cos(\phi_0) \ , \\ \cos(\phi_0 + \phi_1) &\approx \cos(\phi_0) - \phi_1 \sin(\phi_0) \ . \end{aligned}$$

The elastic and damping behavior of the suspension may be linearized about the equilibrium position, stating

$$\frac{\partial \mathcal{U}_s(\phi)}{\partial \phi} = k(\phi_0)\phi_1 \ , \quad \frac{\partial \mathcal{F}\left(\phi, \dot{\phi}\right)}{\partial \dot{\phi}} = c(\phi_0)\dot{\phi}_1 \ . \tag{31.119}$$

Neglecting the term in L_v, the equations of motion become

$$m_{at}\dot{V} + J_s \ddot{\psi} \sin(\phi_0) = F_{x1} + F_{x2} - \frac{1}{2}\rho V^2 S C_x \ , \tag{31.120}$$

$$\begin{aligned} & m\dot{v}_y + m_{at} V \dot{\psi} - mh\ddot{\phi}_1 \cos(\phi_0) = Y_v v_y + Y_{\dot{\psi}} \dot{\psi} + \\ & + Y_\phi \phi_0 + Y_\phi \phi_1 + \cos(\phi_0)\, Y_{v1} v_y + \cos(\phi_0)\, Y_\delta \delta + \\ & - \tfrac{1}{2}\rho V^2 S C_z \sin(\phi_0) - \tfrac{1}{2}\rho V^2 S C_z \phi_1 \cos(\phi_0) + F_{y_e} \ , \end{aligned} \tag{31.121}$$

$$
\begin{gathered}
J_x^* \ddot{\phi}_1 - J_{xz} \cos(\phi_0) \ddot{\psi} - m \dot{v}_y h \cos(\phi_0) + \\
-mgh\phi_1 \cos(\phi_0) + k(\phi_0)\phi_1 + C(\phi_0)\dot{\phi}_1 = 0 \ ,
\end{gathered}
\tag{31.122}
$$

$$
\begin{gathered}
\left[J_y^* \sin^2(\phi_0) + J_z \cos^2(\phi_0)\right] \ddot{\psi} - J_{xz} \cos(\phi_0) \ddot{\phi}_1 + J_s \dot{V} \sin(\phi_0) + \\
+V \cos(\phi_0) \dot{\phi}_1 \textstyle\sum_{\forall i} \frac{J_{pi}}{R_{e_i}} = N_v v_y + N_{\dot{\psi}} \dot{\psi} + N_\phi \phi_0 + N_\phi \phi_1 + \\
+ \cos(\phi_0) N_\delta \delta + N_{v1} v_y \cos(\phi_0) + \tfrac{1}{2}\rho V^2 S(-hC_x + lC_{M_y}) \sin(\phi_0) + \\
+\tfrac{1}{2}\rho V^2 S(-hC_x + lC_{M_y})\phi_1 \cos(\phi_0) + M_{ze} \ .
\end{gathered}
\tag{31.123}
$$

In a more synthetic way, it is possible to write

$$
\mathbf{M}\ddot{\mathbf{q}} + \mathbf{C}\dot{\mathbf{q}} + \mathbf{K}\mathbf{q} = \mathbf{F} + \mathbf{F}_1 \ , \tag{31.124}
$$

where

$$
\mathbf{q}_1 = \begin{bmatrix} x^* & y^* & \phi_1 & \psi \end{bmatrix}^T \ ,
$$

$$
\mathbf{M} = \begin{bmatrix} m_{at} & 0 & 0 & J_s \sin(\phi_0) \\ & m & -mh\cos(\phi_0) & 0 \\ & & J_x^* & -J_{xz}\cos(\phi_0) \\ & \text{symm.} & & J_y^* \sin^2(\phi_0) + J_z \cos^2(\phi_0) \end{bmatrix} ,
$$

$$
\mathbf{C} = \begin{bmatrix} 0 & 0 & 0 & 0 \\ 0 & -Y_v - \cos(\phi_0) Y_{v1} & 0 & m_{at}V - Y_{\dot{\psi}} \\ 0 & 0 & c(\phi_0) & 0 \\ 0 & -N_v - N_{v1}\cos(\phi_0) & V\cos(\phi_0) \sum_{\forall i} \frac{J_{pi}}{R_{e_i}} & -N_{\dot{\psi}} \end{bmatrix} ,
$$

$$
\mathbf{K} = \begin{bmatrix} 0 & 0 & 0 & 0 \\ 0 & 0 & -Y_\phi + \frac{1}{2}\rho V S C_z \cos(\phi_0) & 0 \\ 0 & 0 & -mgh\cos(\phi_0) + k(\phi_0) & 0 \\ 0 & 0 & \frac{1}{2}\rho V_a S(-hC_x + lC_{M_y})\cos(\phi_0) - N_\phi & 0 \end{bmatrix} ,
$$

$$
\mathbf{F} = \left\{ \begin{array}{c} F_{x1} + F_{x2} - \frac{1}{2}\rho V^2 S C_x \\ Y_\phi \phi_0 - \frac{1}{2}\rho V^2 S C_z \sin(\phi_0) \\ 0 \\ +N_\phi \phi_0 + \frac{1}{2}\rho V^2 S(-hC_x + lC_{M_y})\sin(\phi_0) \end{array} \right\} ,
$$

$$
\mathbf{F}_1 = \delta \left\{ \begin{array}{c} 0 \\ \cos(\phi_0) Y_\delta \\ 0 \\ \cos(\phi_0) N_\delta \end{array} \right\} + \left\{ \begin{array}{c} 0 \\ F_{y_e} \\ 0 \\ M_{z_e} \end{array} \right\} .
$$

As already stated, coordinates x^*, y^* and ψ are present only in the form of their derivatives: The order of the differential set of equations is then 5 rather than 8.

The mass matrix is symmetrical, as could be easily predicted, while the two other matrices are not.

31.2.11 Steady-state handling

In steady-state conditions, the first equation reduces to

$$F_{x1} + F_{x2} - \frac{1}{2}\rho V^2 S C_x = 0 \ ,$$

which coincides with the equation seen for the motor vehicle working with small roll angles.

As expected, the third equation yields simply

$$\phi_1 = 0 \ .$$

The other two equations reduce to

$$\begin{bmatrix} -Y_v - \cos(\phi_0) Y_{v1} & m_{at}V - Y_{\dot\psi} \\ -N_v - N_{v1}\cos(\phi_0) & -N_{\dot\psi} \end{bmatrix} \begin{Bmatrix} v_y \\ \dot\psi \end{Bmatrix} = \delta\cos(\phi_0) \begin{Bmatrix} Y_\delta \\ N_\delta \end{Bmatrix} + \tag{31.125}$$

$$+ \begin{Bmatrix} Y_\phi\phi_0 - \frac{1}{2}\rho V S^2 C_z \sin(\phi_0) \\ +N_\phi\phi_0 + \frac{1}{2}\rho V^2 S(-hC_x + lC_{M_y})\sin(\phi_0) \end{Bmatrix} + \begin{Bmatrix} F_{y_e} \\ M_{z_e} \end{Bmatrix} .$$

Because in steady-state

$$v_y = V\beta \ , \quad \dot\psi = \frac{V}{R} \ ,$$

the radius of the trajectory and the sideslip angle may be computed at any given steering angle. As an alternative, the steering and sideslip angles may be computed as functions of the radius of the trajectory. In the latter case, it follows that

$$\begin{bmatrix} -Y_v - \cos(\phi_0) Y_{v1} & -Y_\delta\cos(\phi_0) \\ -N_v - N_{v1}\cos(\phi_0) & -N_\delta\cos(\phi_0) \end{bmatrix} \begin{Bmatrix} v_y \\ \delta \end{Bmatrix} = -\frac{V}{R} \begin{Bmatrix} m_{at}V - Y_{\dot\psi} \\ -N_{\dot\psi} \end{Bmatrix} + \tag{31.126}$$

$$+ \begin{Bmatrix} Y_\phi\phi_0 - \frac{1}{2}\rho V^2 S C_z \sin(\phi_0) \\ +N_\phi\phi_0 + \frac{1}{2}\rho V^2 S(-hC_x + lC_{M_y})\sin(\phi_0) \end{Bmatrix} + \begin{Bmatrix} F_{y_e} \\ M_{z_e} \end{Bmatrix} .$$

The model is nonlinear at ϕ_0, making it impossible to compute gains independent from the conditions of motion.

It is, at any rate, interesting to write Eq. (31.126) assuming that angle ϕ_0 is small enough to linearize its trigonometric functions and that the gyroscopic effect of the wheels is negligible. In this case

$$\phi_0 = -\mathrm{artg}\left(\frac{V^2}{Rg}\right) \approx -\frac{V^2}{Rg}$$

and, if no external forces and moments act on the vehicle, Eq. (31.126) becomes

$$\begin{bmatrix} -Y_v^* & -Y_\delta \\ -N_v^* & -N_\delta \end{bmatrix} \begin{Bmatrix} v_y \\ \delta \end{Bmatrix} = \frac{V}{R} \begin{Bmatrix} Y_{\dot\psi} - m_{at}V \\ N_{\dot\psi} \end{Bmatrix} - \frac{V^2}{Rg} \begin{Bmatrix} Y_\phi^* \\ N_\phi^* \end{Bmatrix} , \tag{31.127}$$

where

$$\begin{aligned} Y_v^* &= Y_v + Y_{v1} \ , & Y_\phi^* &= Y_\phi - \tfrac{1}{2}\rho V S^2 C_z \ , \\ N_v^* &= N_v + N_{v1} \ , & N_\phi^* &= N_\phi + \tfrac{1}{2}\rho V S^2 (-hC_x + lC_{M_y}) \ . \end{aligned} \tag{31.128}$$

The path curvature gain is then

$$\frac{1}{R\delta} = \frac{1}{V} \frac{N_v^* Y_\delta - N_\delta Y_v^*}{\left[Y_v^* N_{\dot\psi} + N_v^* \left(m_{at} V - Y_{\dot\psi}\right)\right] + \frac{V}{g}\left[N_v^* Y_\phi^* - N_\phi^* Y_v^*\right]} \ . \tag{31.129}$$

The result is identical to that seen for the non-tilting vehicle (Y_v^* and N_v^* also coincide with the values computed in Chapter 25) except for the term in braces at the denominator, containing terms Y_ϕ^* and N_ϕ^* due to the camber stiffness of the tires, plus some aerodynamic terms. It is interesting to note that the tilt of the vehicle and thus the camber thrust (because it has been assumed that $\gamma = \phi$) affects its behavior even if the roll angle tends to zero.

Remark 31.3 *This outcome should be obvious: If the vehicle does not tilt, the side force is due only to the sideslip of the wheels, while if $\gamma = \phi$, roll produces a camber thrust that adds to the sideslip force. If $R \to \infty$, both the components of the side force tend to zero, but their ratio remains constant.*

Example 31.4 *Consider a three-wheeled vehicle with two wheels at the front axle, with the following characteristics:*

Geometrical data: $l = 1.720$ m, $a = 0.77$ m, $h = 576$ mm, $R_{e1} = R_{e2} = 310$ mm.

Inertial data: $m = 358$ kg, $J_x = 31$ kg m^2, $J_y = 125$ kg m^2, $J_z = 111$ kg m^2, $J_{xz} = 0$, $J_{p1} = J_{p2} = 0.18$ kg m^2.

Aerodynamic data: $\rho = 1.29$ kg/m^3, $S = 1$ m^2, $C_x = 0.35$, $C_{My} = (C_{Mx})_{,\beta} = (C_{Mz})_{,\beta} = C_z = 0$, $(C_y)_{,\beta} = 0.026$.

Tire data: $f_0 = 0.01$, $K = 4 \times 10^{-6}$ s^2/m^2, $C_1/F_z = C_2/F_z = 17.9$ 1/rad, $(M_{z1})_{,\alpha}/F_z = (M_{z2})_{,\alpha}/F_z = 0.21$ m/rad, $C_{\gamma 1}/F_z = C_{\gamma 2}/F_z = -1.1$ 1/rad.

Compute the steady state roll angle as a function of the ratio between centrifugal and gravitational accelerations, and the path curvature gain for different values of the radius of the trajectory.

Steady-state roll angle. *The result, computed both by taking gyroscopic moments into account and neglecting them, is reported in Fig. 31.8.*

From the plot it is clear that the gyroscopic effect of the wheels has little influence in determining the steady-state roll angle and that the conditions of no load shift and local vertical aligned with the z axis coincide.

Trajectory curvature gain. *The results, computed on a trajectory with a radius tending to infinity, and equal to 1,000, 500, 200, 100 and 50 m are reported in Fig. 31.9, together with the roll angle on the same radii. The dashed line, labelled $\phi_0 = 0$, refers to a non-tilting vehicle.*

The non-tilting vehicle is strongly understeer (traction has not been accounted for). Tilting allows the vehicle to travel on the curve with smaller sideslip angles of the wheels. At large radii, the vehicle even becomes oversteer.

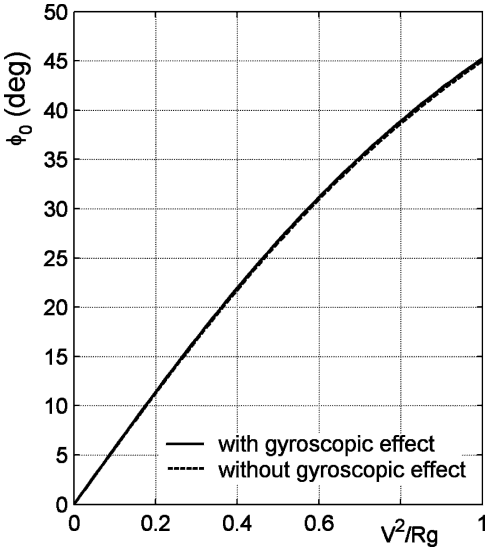

FIGURE 31.8. Steady state roll angle as a function of centrifugal acceleration, computed both by considering the gyrosoping moments of the wheels and neglecting them.

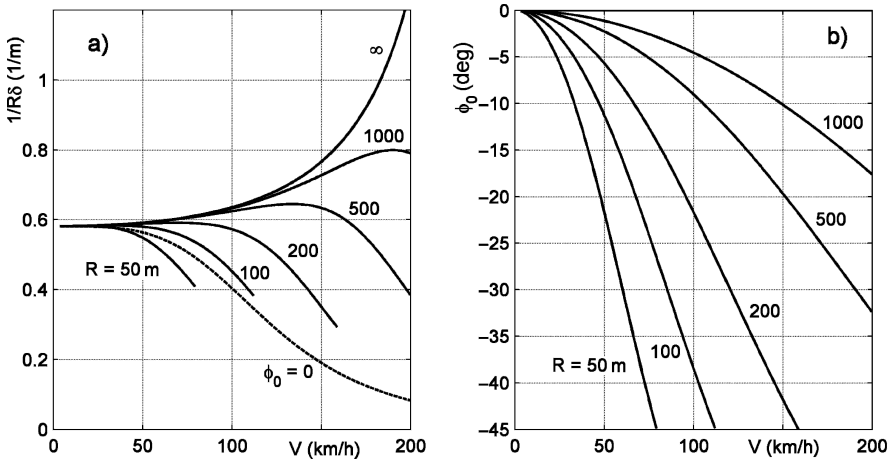

FIGURE 31.9. Path curvature gain $1/R\delta$ and steady-state roll angle ϕ_0 versus the speed V on trajectories with different radii.

With decreasing path radius (and then at equal speed with increasing centrifugal acceleration and roll angle) the vehicle first becomes less oversteer and then increasingly understeer, the result of the term in $\cos(\phi_0)$ *multiplying the steering angle* δ*. In the figure the tilt is limited to* $45°$*, with the curve stopping at a given speed in the case of a path with small radius.*

31.2.12 Stability about the steady-state condition

Assume that the vehicle is travelling at a constant speed V on a circular trajectory in steady-state conditions characterized by the values v_{y0},

$$\dot{\psi}_0 = \frac{V}{R}$$

and ϕ_0 of the variables of motion and by the corresponding value δ_0 of the steering angle. Assume also that the external forces F_{y_e} and M_{z_e} vanish. The small perturbations v_{y1}, $\dot{\psi}_1$ and ϕ_1 add to the above mentioned values of the parameters.

Uncoupling, at least as a first approximation, the first equation dealing with longitudinal motion, the remaining three equations of motion (31.124) become

$$\begin{aligned} m\dot{v}_{y1} - mh\cos(\phi_0)\ddot{\phi}_1 - [Y_v + \cos(\phi_0)Y_{v1}](v_{y1} + v_{y0}) + \\ + \left(m_{at}V - Y_{\dot{\psi}}\right)\left(\dot{\psi}_1 + \dot{\psi}_0\right) + [Y_\phi + Y_{\phi 1}\cos(\phi_0)]\phi_1 = \\ = Y_\phi\phi_0 - \tfrac{1}{2}\rho V S^2 C_z \sin(\phi_0) + \cos(\phi_0) Y_\delta \delta_0 \ , \end{aligned} \tag{31.130}$$

$$\begin{aligned} -mh\cos(\phi_0)\dot{v}_{y1} + J_x^*\ddot{\phi}_1 - J_{xz}\cos(\phi_0)\ddot{\psi}_1 + \\ + c(\phi_0)\dot{\phi}_1 + [-mgh\cos(\phi_0) + k(\phi_0)]\phi_1 = 0 \ , \end{aligned} \tag{31.131}$$

$$\begin{aligned} -J_{xz}\cos(\phi_0)\ddot{\phi}_1 + \left[J_y^*\sin^2(\phi_0) + J_z\cos^2(\phi_0)\right]\ddot{\psi}_1 + \\ + [-N_v - N_{v1}\cos(\phi_0)](v_{y1} + v_{y0}) + V\cos(\phi_0)\textstyle\sum_{\forall i}\frac{J_{pi}}{R_{e_i}}\dot{\phi}_1 + \\ -N_{\dot{\psi}}\left(\dot{\psi}_1 + \dot{\psi}_0\right) - [N_{\phi 1}\cos(\phi_0) + N_\phi]\phi_1 = N_\phi\phi_0 + \\ + \tfrac{1}{2}\rho V^2 S(-hC_x + lC_{M_y})\sin(\phi_0) + \cos(\phi_0) N_\delta \delta_0 \ , \end{aligned} \tag{31.132}$$

where

$$\begin{aligned} N_{\phi 1} &= \frac{1}{2}\rho V^2 S(-hC_x + lC_{M_y}) \ , \\ Y_{\phi 1} &= -\frac{1}{2}\rho V^2 S C_z \ . \end{aligned}$$

Because motion takes place about the static equilibrium condition, it is possible to eliminate the parameters related to the latter by using Equations (31.125) and (31.124), obtaining

$$\begin{aligned} m\dot{v}_{y1} - mh\cos(\phi_0)\ddot{\phi}_1 - [Y_v + \cos(\phi_0)Y_{v1}]v_{y1} + \\ + \left(m_{at}V - Y_{\dot{\psi}}\right)\dot{\psi}_1 - [Y_\phi + Y_{\phi 1}\cos(\phi_0)]\phi_1 = 0 \ , \end{aligned} \tag{31.133}$$

$$-mh\cos(\phi_0)\,\dot{v}_{y1} + J_x^*\ddot{\phi}_1 - J_{xz}\cos(\phi_0)\,\ddot{\psi}_1 + \\ +c(\phi_0)\dot{\phi}_1 + [-mgh\cos(\phi_0) + k(\phi_0)]\,\phi_1 = 0\ , \tag{31.134}$$

$$-J_{xz}\cos(\phi_0)\,\ddot{\phi}_1 + \left[J_y^*\sin^2(\phi_0) + J_z\cos^2(\phi_0)\right]\ddot{\psi}_1 + \\ -\left[N_v + N_{v1}\cos(\phi_0)\right]v_{y1} + V\cos(\phi_0)\textstyle\sum_{\forall i}\frac{J_{pi}}{R_{e_i}}\dot{\phi}_1 + \\ -N_{\dot{\psi}}\dot{\psi}_1 - [N_{\phi 1}\cos(\phi_0) + N_\phi]\,\phi_1 = 0\ . \tag{31.135}$$

The equations may then be written in the state space in the form

$$\mathbf{A}_2\dot{\mathbf{z}} = \mathbf{A}_1\mathbf{z}\ , \tag{31.136}$$

where

$$\mathbf{z} = \begin{bmatrix} v_y & v_\phi & v_\psi & \phi \end{bmatrix}^T\ ,$$

$$v_\phi = \dot{\phi}\ , \quad v_\psi = \dot{\psi}\ ,$$

and

$$\mathbf{A}_2 = \begin{bmatrix} m & -mh\cos(\phi_0) & 0 & 0 \\ -mh\cos(\phi_0) & J_x^* & -J_{xz}\cos(\phi_0) & 0 \\ 0 & -J_{xz}\cos(\phi_0) & J_y^*\sin^2(\phi_0) + J_z\cos^2(\phi_0) & 0 \\ 0 & 0 & 0 & 1 \end{bmatrix}\ ,$$

$$\mathbf{A}_1 = \begin{bmatrix} Y_v^* & 0 & -m_{at}V + Y_{\dot{\psi}} & Y_\phi + Y_{\phi 1}\cos(\phi_0) \\ 0 & -c(\phi_0) & J_sV\cos(\phi_0) & mgh\cos(\phi_0) - k(\phi_0) \\ N_v^* & N_{\dot{\phi}}^* & N_{\dot{\psi}} & N_{\phi 1}\cos(\phi_0) + N_\phi \\ 0 & 1 & 0 & 0 \end{bmatrix}\ ,$$

$$Y_v^* = Y_v + Y_{v1}\cos(\phi_0)\ \ ,\ \ N_v^* = N_v + N_{v1}\cos(\phi_0)\ \ ,$$

$$N_{\dot{\phi}}^* = -V\cos(\phi_0)\sum_{\forall i}\frac{J_{pi}}{R_{e_i}}\ .$$

The dynamic matrix, whose eigenvalues allow the stability to be studied, is then

$$\mathbf{A} = \mathbf{A}_2^{-1}\mathbf{A}_1\ . \tag{31.137}$$

Example 31.5 *Study the stability of the vehicle of the previous example, assuming that the stiffness and the damping of the suspension are constant with varying roll angle. Use the values $k = 4.000$ Nm/rad and $c = 90$ Nms/rad.*

The real and imaginary parts of the eigenvalues are plotted versus the speed together with the roots locus for various path curvature radii in Fig. 31.10. As can be seen, the vehicle is stable in all conditions.

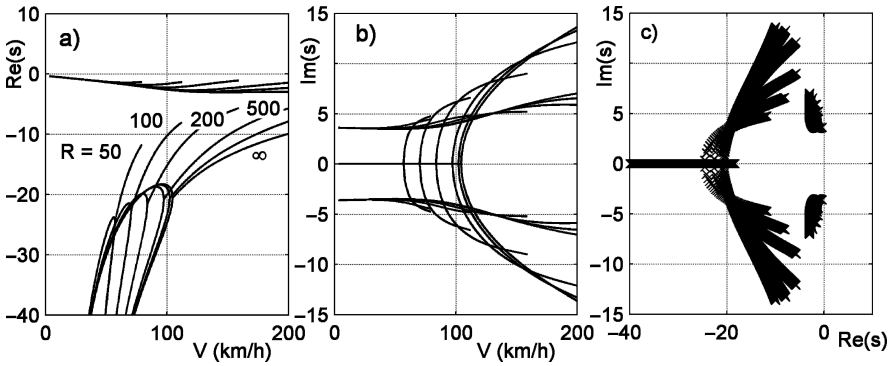

FIGURE 31.10. Real (a) and imaginary (b) parts of the eigenvalues of the dynamic matrix versus the speed and (c) roots locus for various path curvature radii ($R = 50$, 100, 200, 500, 1000 m and $R \to \infty$).

31.3 DYNAMIC TILTING CONTROL

Assume that the vehicle is provided with a tilt control device able to maintain load shift at a zero value or to keep the local vertical in the symmetry plane. In the previous section it was shown that in steady state conditions these two goals almost coincide, at least with the usual values of the gyroscopic moments of the wheels and of aerodynamic actions (the two curves in Fig. 31.8 are practically superimposed upon each other).

If it is easy to define the roll angle to satisfy this requirement in steady state conditions, it is much more difficult to identify a control strategy to do the same in non-steady state conditions.

Assume that the actuator dynamics may be expressed by the equation

$$J_a\ddot{\phi}_c + c_{22}\dot{\phi}_c - c_{21}\dot{\phi}_s + k_{22}\phi_c - k_{21}\phi_s = M_c \ , \tag{31.138}$$

where ϕ_s is the rotation angle of the actuator corresponding to roll angle ϕ when the spring exerts no force, J_a is the moment of inertia of the actuator, M_c is the torque it exerts, both reduced to its output shaft, and c_{ij} and k_{ij} are the suspension damping coefficients and stiffnesses, which obviously are functions of ϕ and ϕ_c.

If the error is defined as

$$e = \phi + \operatorname{artg}\left(\dot{\psi}\frac{VJ_s}{gmh}\right) \ , \tag{31.139}$$

a proportional, integrative and derivative (PID) strategy leads to a moment M_c equal to

$$\begin{aligned} M_c = -K_p \left[\phi + \operatorname{artg}\left(\dot{\psi}\frac{VJ_s}{gmh}\right)\right] - K_d\left(\dot{\phi} + \ddot{\psi}\frac{VJ_s}{gmh}\right) + \\ -K_i \int \left[\phi + \operatorname{artg}\left(\dot{\psi}\frac{VJ_s}{gmh}\right)\right] dt \ . \end{aligned} \tag{31.140}$$

where K_p, K_d and K_i are the proportional, derivative and integrative gains. The error for the derivative gain was simplified by conflating the arctangent with its argument.

Because ϕ_s is a known function of ϕ, it is possible to add the control equation to those of the vehicle, thus studying the dynamics of the controlled system.

In the following pages it will be assumed for simplicity that $d = d_1 = 0$, and then $\phi_s = \phi$. In this case $c_{22} = c_{21} = c_\phi$ and $k_{22} = k_{21} = k_\phi$ and the equation of motion of the controlled actuator becomes

$$\begin{aligned} J_a\ddot{\phi}_c + K_d\ddot{\psi}\frac{VJ_s}{gmh} + c_\phi\dot{\phi}_c - (c_\phi - K_d)\,\dot{\phi} + K_p\operatorname{artg}\left(\dot{\psi}\frac{VJ_s}{gmh}\right) + \\ +k_\phi\phi_c - (k_\phi - K_p)\,\phi + K_i\int\left[\phi + \operatorname{artg}\left(\dot{\psi}\frac{VJ_s}{gmh}\right)\right] dt = 0 \ . \end{aligned} \tag{31.141}$$

The equation of motion of the controlled system in the state space may be written in the form

$$\mathbf{A}_2\dot{\mathbf{z}} = \mathbf{A}_1\mathbf{z} + \mathbf{f} \ , \tag{31.142}$$

where to the states of the vehicle

$$V \ , \ v_y \ , \quad v_\phi = \dot{\phi} \ , \quad v_\psi = \dot{\psi} \ , \ \phi \ ,$$

other states must be added, namely ϕ_c and its derivative $v_{\phi c} = \dot{\phi}_c$ plus a state linked with the error of the derivative branch of the control

$$e_i = \int\left[\phi + \operatorname{artg}\left(\dot{\psi}\frac{VJ_s}{gmh}\right)\right] dt \ .$$

The state vector is then

$$\mathbf{z} = \left[\begin{array}{cccccccc} V & v_y & v_\phi & v_\psi & v_{\phi c} & \phi & \phi_c & e_i \end{array}\right]^T \ .$$

The other terms included in the state space equation are

$$\mathbf{A}_2 = \left[\begin{array}{cccccccc} m_{at} & 0 & 0 & J_s\sin(\phi) & 0 & 0 & 0 & 0 \\ & m & -mh\cos(\phi) & 0 & 0 & 0 & 0 & 0 \\ & & J_x^* & -J_{xz}\cos(\phi) & 0 & 0 & 0 & 0 \\ & & & J_z^* & 0 & 0 & 0 & 0 \\ & & & K_d\frac{VJ_s}{gmh} & J_a & 0 & 0 & 0 \\ & & & & & 1 & 0 & 0 \\ & & & & & & 1 & 0 \\ & & \text{symm.} & & & & & 1 \end{array}\right] ,$$

where

$$J_z^* = J_y^* \sin^2(\phi) + J_z \cos^2(\phi) \ ,$$

$$\mathbf{A}_1 = \begin{bmatrix} 0 & 0 & 0 & 0 & 0 & 0 & 0 & 0 \\ 0 & Y_v^* & 0 & -m_{at}V + Y_{\dot\psi} & 0 & Y_\phi & 0 & 0 \\ 0 & L_v & -c_\phi & J_s V \cos(\phi) & c_\phi & -k_\phi & k_\phi & 0 \\ 0 & N_v^* & N_{\dot\phi}^* & N_{\dot\psi} & 0 & N_\phi & 0 & 0 \\ 0 & 0 & (c_\phi - K_d) & K_p \frac{V}{g} & -c_\phi & k_\phi - K_p & -k_\phi & -K_i \\ 0 & 0 & 1 & 0 & 0 & 0 & 0 & 0 \\ 0 & 0 & 0 & 0 & 1 & 0 & 0 & 0 \\ 0 & 0 & 0 & 0 & 0 & 1 & 0 & 0 \end{bmatrix} ,$$

$$Y_v^* = Y_v + Y_{v1} \cos(\phi) \ , \ \ N_v^* = N_v + N_{v1} \cos(\phi) \ ,$$

$$N_{\dot\phi}^* = -V \cos(\phi) \sum_{\forall i} \frac{J_{pi}}{R_{e_i}} \ ,$$

and

$$\mathbf{f} = \begin{Bmatrix} F_{x1} + F_{x2} - \frac{1}{2}\rho V^2 S C_x \\ \cos(\phi)\, Y_\delta \delta - \frac{1}{2}\rho V^2 S C_z \sin(\phi) + F_{y_e} \\ mgh \sin(\phi) \\ \cos(\phi)\, N_\delta \delta + \frac{1}{2}\rho V^2 S(-hC_x + lC_{M_y}) \sin(\phi) + M_{ze} \\ -K_p \mathrm{atan}\left(\dot\psi \frac{V J_s}{gmh}\right) \\ 0 \\ 0 \\ \mathrm{atan}\left(\dot\psi \frac{V J_s}{gmh}\right) \end{Bmatrix} .$$

Note that matrix $\mathbf{A}_2$ is not fully symmetrical owing to the term K_d in position 5,4.

Example 31.6 *Using the vehicle of the previous example, study the response to a steering step, assuming that the actuator's moment of inertia, reduced to the output shaft, is $J_a = 0.001$ kg/m^2. Assume control gains $K_p = 60,000$ Nm/rad, $K_d = 6,000$ Nms/rad, $K_i = 10,000$ Nm/(s rad). The manoeuvre is performed at a speed of 120 km/h and the steering angle $\delta = 1^\circ$ is given at $t = 0$.*

Because the manoeuvre is performed at constant speed, the first equation may be considered uncoupled from the others and is therefore not considered.

The results are reported in Fig. 31.11. From the plot it is clear that the vehicle reaches steady-state conditions in about 1 s. After 2 s the values of ϕ and ϕ_c are respectively 39.85° and 39.98°, while the steady state value on the same path ($R = 136.24$ m) is 39.98° for both. The values of β (0.175°) and $\dot\psi$ (0.2447 rad/s) at the end of the manoeuvre coincide with those computed for steady-state operation.

Because the input is a step, the sideslip angle becomes strongly negative at the beginning and the center of mass moves to the outside of the curve, because the vehicle

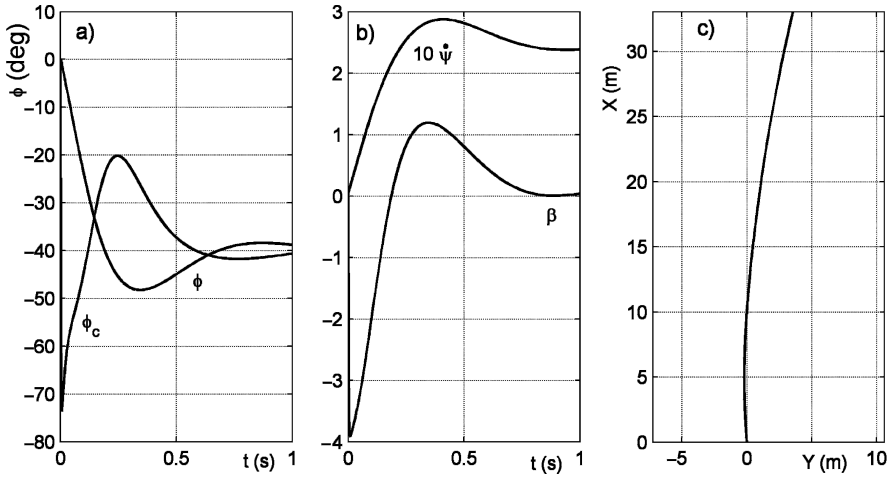

FIGURE 31.11. Response to a step steering input. Time histories of the roll angle ϕ and rotation angle of the actuator ϕ_c (a) and of the sideslip angle β and yaw velocity $\dot{\psi}$ (b). (c): Path.

starts overturning. The controller immediately reacts with a high value of ϕ_c and starts a correction that prevents the vehicle from rolling over: After several much damped oscillations, equilibrium is restored.

31.4 HANDLING-COMFORT COUPLING

The dynamics of tilting body vehicles was studied in the previous sections in terms of handling using a model with four degrees of freedom. However, this approach can only be considered a rough approximation, because uncoupling between handling and comfort is no longer applicable when the assumption of small angles does not hold.

The present section will be devoted to developing a model similar to the previous, but with two added degrees of freedom linked with comfort: heave and pitch. It is thus a model with sixdegrees of freedom, still based on the assumption of rigid tires, that could be extended to nine or 10 degrees of freedom (for vehicles with three or four wheels respectively) by including the compliance of the tires.

The assumptions that the roll axis remains on the ground during heave motion and that it remains in the same position shown for the vehicle without suspension will be made. The displacement of the center of mass of the vehicle, which will at any rate be considered a small quantity, will occur in the direction of the z axis of the body-fixed reference frame. Pitch rotation will occur about the baricentric y axis, which is perpendicular to the symmetry plane in its undeformed position.

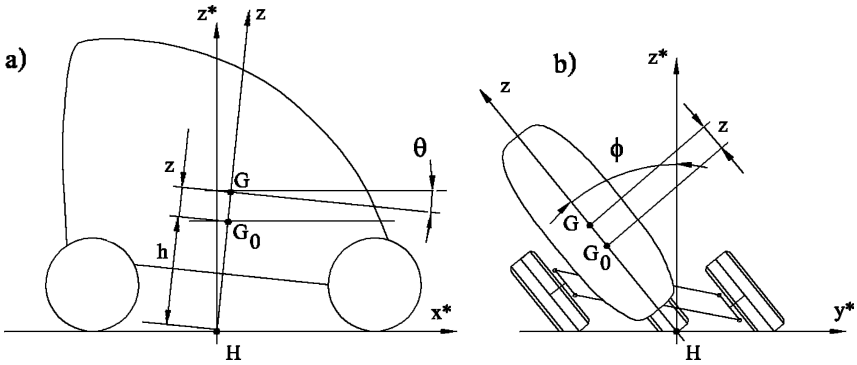

FIGURE 31.12. Reference frames for the sprung mass and definition of points G, G_0 and H.

The roll axis will then display no pitch rotation. The generalized coordinates for translations of the sprung mass will again be coordinates X_H, Y_H of point H located on the ground, on the perpendicular to the roll axis passing through the centre of mass G. The z coordinate (Fig. 31.12), and the yaw ψ, roll ϕ and then pitch θ, will be added as generalized coordinates. The three angles will be taken in this order, with the latter considered as a small angle. Note that although the order is different from the usual, these are still Tait−Bryan angles.

As usual, the assumption of small angles (particularly for the sideslip angle β) allows the component v_{x^*} of the velocity to be conflated with the forward velocity V. Linear velocities v_y and $\dot{z}$ and and angular velocities $\dot{\psi}$, $\dot{\phi}$ and $\dot{\theta}$ will be considered as small quantities too. The small size of displacements z and θ make the order in which these two displacements (linear and angular) are performed immaterial.

31.4.1 Kinetic and potential energies

Because pitch rotation was not considered in the definition of the roll axis and the latter is horizontal, the order of the rotations is now yaw, roll and pitch. The rotation matrix allowing us to pass from the body-fixed frame Gxyz to the inertial frame $X_iY_iZ_i$ is:

$$\mathbf{R} = \mathbf{R}_1\mathbf{R}_2\mathbf{R}_3 \ , \tag{31.143}$$

where to matrices $\mathbf{R}_1$ and $\mathbf{R}_2$ seen in the previous section, a pitch matrix must be added

$$\mathbf{R}_3 = \begin{bmatrix} \cos(\theta) & 0 & \sin(\theta) \\ 0 & 1 & 0 \\ -\sin(\theta) & 0 & \cos(\theta) \end{bmatrix} .$$

The time derivative of the rotation matrix is

$$\dot{\mathbf{R}} = \dot{\mathbf{R}}_1\mathbf{R}_2\mathbf{R}_3 + \mathbf{R}_1\dot{\mathbf{R}}_2\mathbf{R}_3 + \mathbf{R}_1\mathbf{R}_2\dot{\mathbf{R}}_3 \ . \tag{31.144}$$

The components of the angular velocity in the body-fixed frame are linked with the derivatives of the coordinates by the relationship

$$\left\{ \begin{array}{c} \Omega_x \\ \Omega_y \\ \Omega_z \end{array} \right\} = \left\{ \begin{array}{c} 0 \\ \dot{\theta} \\ 0 \end{array} \right\} + \mathbf{R}_3^T \left\{ \begin{array}{c} \dot{\phi} \\ 0 \\ 0 \end{array} \right\} + \mathbf{R}_3^T \mathbf{R}_2^T \left\{ \begin{array}{c} 0 \\ 0 \\ \dot{\psi} \end{array} \right\} , \tag{31.145}$$

and then

$$\left\{ \begin{array}{c} \Omega_x \\ \Omega_y \\ \Omega_z \end{array} \right\} = \left[\begin{array}{ccc} \cos(\theta) & 0 & \sin(\theta)\cos(\phi) \\ 0 & 1 & \sin(\phi) \\ -\sin(\theta) & 0 & \cos(\theta)\cos(\phi) \end{array} \right] \left\{ \begin{array}{c} \dot{\phi} \\ \dot{\theta} \\ \dot{\psi} \end{array} \right\} . \tag{31.146}$$

The vector of the generalized coordinates is

$$\mathbf{q} = \left[\begin{array}{cccccc} X & Y & z & \phi & \theta & \psi \end{array} \right]^T . \tag{31.147}$$

Let the generalized velocities for translational degrees of freedom be the components of the velocity v_x and v_y, referred to frame $x^*y^*z^*$, plus component v_z in the direction of axis z. The velocities for the rotational degrees of freedom are SIMPLY the derivatives of the coordinates ϕ, θ and ψ. They will be designated as v_ϕ, v_θ and v_ψ respectively.

The vector of the generalized velocities is then

$$\mathbf{w} = \left[\begin{array}{cccccc} v_x & v_y & v_z & v_\phi & v_\theta & v_\psi \end{array} \right]^T . \tag{31.148}$$

The relationship between generalized velocities and derivatives of coordinates is the usual one

$$\mathbf{w} = \mathbf{A}^T \dot{\mathbf{q}} , \tag{31.149}$$

where matrix $\mathbf{A}$[4] is:

$$\mathbf{A} = \left[\begin{array}{cc} \mathbf{R}_1 & \mathbf{0}_{3\times3} \\ \mathbf{0}_{3\times3} & \mathbf{I}_{3\times3} \end{array} \right] . \tag{31.150}$$

Because $\mathbf{A}$ is a rotation matrix, the inverse transformation is

$$\dot{\mathbf{q}} = \mathbf{B}\mathbf{w} = \mathbf{A}\mathbf{w} .$$

The vector defining the position of the center of mass of the sprung mass $\mathrm{G_S}$ with respect to point H is

$$\mathbf{r}_1 = (h+z) \left[\begin{array}{ccc} 0 & 0 & 1 \end{array} \right]^T , \tag{31.151}$$

and then the absolute position of $\mathrm{G_S}$ is

$$(\overline{\mathrm{G_S{-}O'}}) = (\overline{\mathrm{H-O'}}) + \mathbf{R}\mathbf{r}_1. \tag{31.152}$$

[4]Again, matrix $\mathbf{A}$ has nothing to do with the dynamic matrix of the system in the state space, usually referred to as $\mathbf{A}$.

The velocity of G_S may be written as

$$\mathbf{V}_{G_S} = \begin{bmatrix} \dot{X} & \dot{Y} & 0 \end{bmatrix}^T + \dot{\mathbf{R}}\mathbf{r}_1 + \mathbf{R}\dot{\mathbf{r}}_1 \ , \tag{31.153}$$

i.e.

$$\mathbf{V}_{G_S} = \mathbf{R}_1\mathbf{V} + \dot{\mathbf{R}}\mathbf{r} + \mathbf{R}\dot{\mathbf{r}}_1 \ . \tag{31.154}$$

The translational kinetic energy of the sprung mass is then

$$\begin{aligned} \mathcal{T}_t = \tfrac{1}{2}m\left(\mathbf{V}^T\mathbf{V} + \mathbf{r_1}^T\dot{\mathbf{R}}^T\dot{\mathbf{R}}\mathbf{r_1} + \dot{\mathbf{r}}_\mathbf{1}^\mathbf{T}\mathbf{R}^\mathbf{T}\mathbf{R}\dot{\mathbf{r}}_\mathbf{1}\right) + \\ +m\left(\mathbf{V}^T\mathbf{R}_1^T\dot{\mathbf{R}}\mathbf{r_1} + \mathbf{V}^T\mathbf{R}_1^T\mathbf{R}\dot{\mathbf{r}}_\mathbf{1} + \mathbf{r_1}^\mathbf{T}\dot{\mathbf{R}}^\mathbf{T}\mathbf{R}\dot{\mathbf{r}}_\mathbf{1}\right) \ . \end{aligned} \tag{31.155}$$

Because plane xz coincides with the symmetry plane of the sprung mass, the inertia tensor of the latter is

$$\mathbf{J} = \begin{bmatrix} J_x & 0 & -J_{xz} \\ 0 & J_y & 0 \\ -J_{xz} & 0 & J_z \end{bmatrix} \ . \tag{31.156}$$

The rotational kinetic energy of the sprung mass is

$$\mathcal{T}_r = \frac{1}{2}\mathbf{\Omega}^T\mathbf{J}\mathbf{\Omega} \ . \tag{31.157}$$

By performing the relevant computations, expressing the angular velocity as functions of the variables of motion and neglecting all terms containing powers of small quantities higher than the second, it follows that

$$\begin{aligned} \mathcal{T} = \tfrac{1}{2}m\left(v_x^2 + v_y^2 + v_z^2\right) + \tfrac{1}{2}J_x^*\dot{\phi}^2 + \tfrac{1}{2}\left[J_y^*\sin^2(\phi) + J_z\cos^2(\phi)\right]\dot{\psi}^2 + \\ -J_{xz}\cos(\phi)\,\dot{\psi}\,\dot{\phi} + J_y\sin(\phi)\,\dot{\psi}\dot{\theta} + mv_x\left\{\theta\dot{z} + (h+z)\left[\dot{\theta} + \dot{\psi}\sin(\phi)\right]\right\} + \\ +\tfrac{1}{2}J_y^*\dot{\theta}^2 - mv_y\left[\dot{z}\sin(\phi) + h\dot{\phi}\cos(\phi)\right] \ , \end{aligned} \tag{31.158}$$

where

$$J_x^* = mh^2 + J_x \ , \quad J_y^* = mh^2 + J_y \ .$$

Note that in the present model the unsprung mass is neglected, making m both the total mass of the vehicle and the mass of the body.

It can easily be seen that the expression of the kinetic energy coincides with the expression obtained for the model with four degrees of freedom (Eq. 31.61), plus the term

$$\begin{aligned} \Delta\mathcal{T} = \tfrac{1}{2}mv_z^2 + \tfrac{1}{2}J_y^*\dot{\theta}^2 + J_y\sin(\phi)\,\dot{\psi}\dot{\theta} + \\ +mv_x\left[\theta v_z + \dot{\theta}\,(h+z) + z\dot{\psi}\sin(\phi)\right] - mv_y\dot{z}\sin(\phi) \ . \end{aligned} \tag{31.159}$$

The height of the center of mass on the ground is

$$Z_G = (h + z)\cos(\phi)\cos(\theta) \ , \tag{31.160}$$

and then the gravitational potential energy of the vehicle is, with the usual approximations due to the smallness of θ,

$$\mathcal{U}_g = mg\,(h + z)\cos(\phi)\left(1 - \frac{\theta^2}{2}\right) \ . \tag{31.161}$$

While in the previous model the potential energy due to suspensions was a function of the roll angle only, here it depends also on the pitch angle and the vertical displacement. However, it can be assumed that the suspensions are such that it is possible to keep the two contributions separate:

$$\mathcal{U}_s = \mathcal{U}_{s1}(\phi) + \mathcal{U}_{s2}(z, \theta) \ . \tag{31.162}$$

The potential energy is then what was seen in the previous model, plus a contribution due to the two additional degrees of freedom

$$\Delta\mathcal{U} = mgz\cos(\phi) - mg\cos(\phi)\frac{\theta^2}{2} + \mathcal{U}_{s2}(z, \theta) \ . \tag{31.163}$$

In a similar way, also the dissipation function may be modified by simply adding the term

$$\Delta\mathcal{F} = \mathcal{F}_2\left(\dot{z}, \dot{\theta}\right) \ . \tag{31.164}$$

Because generalized coordinates z and θ are small quantities, functions $\mathcal{U}_{s2}$ and $\mathcal{F}_2$ are those of a linear system. $\mathcal{F}_2$ in particular does not depend on z and θ, but only on their derivatives.

It is possible to assume, at least as a first approximation, that the two added degrees of freedom have no effect on the kinetic energy of the wheels. In that case the total Lagrangian function of the system is that of the previous model, to which the term

$$\Delta\mathcal{L} = \Delta\mathcal{T} - \Delta\mathcal{U} \tag{31.165}$$

is added.

The derivatives of the added terms in the Lagrangian function are

$$\frac{\partial\Delta\mathcal{L}}{\partial V} = m\dot{\theta}h \ , \quad \frac{\partial\Delta\mathcal{L}}{\partial v_y} = -mv_z\sin(\phi) \ , \tag{31.166}$$

$$\frac{\partial\Delta\mathcal{L}}{\partial v_z} = mv_z - mv_y\sin(\phi) \ , \quad \frac{\partial\Delta\mathcal{L}}{\partial\dot{\phi}} = 0 \ , \tag{31.167}$$

$$\frac{\partial\Delta\mathcal{L}}{\partial\dot{\theta}} = J_y^*\dot{\theta} + J_y\sin(\phi)\,\dot{\psi} + mv_x\,(h + z) \ , \tag{31.168}$$

$$\frac{\partial\Delta\mathcal{L}}{\partial\dot{\psi}} = J_y\sin(\phi)\,\dot{\theta} + mv_x z\sin(\phi) \ . \tag{31.169}$$

Always remembering that no term containing the products of two or more small quantities may be present in the equations of motion, it follows that

$$\frac{d}{dt}\left(\frac{\partial \Delta\mathcal{L}}{\partial V}\right) = m\ddot{\theta}h \ , \ \frac{d}{dt}\left(\frac{\partial \Delta\mathcal{L}}{\partial v_y}\right) = -m\dot{v}_z \sin(\phi) \ , \tag{31.170}$$

$$\frac{d}{dt}\left(\frac{\partial \Delta\mathcal{L}}{\partial v_z}\right) = m\dot{v}_z - m\dot{v}_y \sin(\phi) \ , \ \frac{d}{dt}\left(\frac{\partial \Delta\mathcal{L}}{\partial \dot{\phi}}\right) = 0 \ , \tag{31.171}$$

$$\frac{d}{dt}\left(\frac{\partial \Delta\mathcal{L}}{\partial \dot{\theta}}\right) = J_y^*\ddot{\theta} + J_y \sin(\phi)\,\ddot{\psi} + m\dot{V}(h+z) + mVv_z \ , \tag{31.172}$$

$$\frac{d}{dt}\left(\frac{\partial \Delta\mathcal{L}}{\partial \dot{\psi}}\right) = J_y \sin(\phi)\,\ddot{\theta} + m\dot{V}z\sin(\phi) + mV\dot{z}\sin(\phi) \ , \tag{31.173}$$

$$\frac{\partial \Delta\mathcal{L}}{\partial x^*} = \frac{\partial \Delta\mathcal{L}}{\partial y^*} = \frac{\partial \Delta\mathcal{L}}{\partial \psi} = 0 \ , \tag{31.174}$$

$$\frac{\partial \Delta\mathcal{L}}{\partial z} = -mg\cos(\phi) - \frac{\partial \mathcal{U}_{s2}(z,\theta)}{\partial z} \ , \tag{31.175}$$

$$\frac{\partial \Delta\mathcal{L}}{\partial \theta} = +mVv_z + mgh\cos(\phi)\,\theta - \frac{\partial \mathcal{U}_{s2}(z,\theta)}{\partial \theta} \ , \tag{31.176}$$

$$\frac{\partial \Delta\mathcal{L}}{\partial \phi} = mgz\sin(\phi) \ . \tag{31.177}$$

31.4.2 Equations of motion

Matrix $\mathbf{B^T\Gamma}$ is identical to that of the previous model, apart from the different number of rows and columns

$$\mathbf{B^T\Gamma} = \begin{bmatrix} \begin{bmatrix} 0 & -\dot{\psi} \\ \dot{\psi} & 0 \end{bmatrix} & \mathbf{0}_{2\times 4} \\ \mathbf{0}_{3\times 2} & \mathbf{0}_{3\times 4} \\ \begin{bmatrix} -v_y & v_x \end{bmatrix} & \mathbf{0}_{1\times 4} \end{bmatrix} .$$

Matrix $\mathbf{B^T\Gamma}\left\{\frac{\partial \mathcal{L}}{\partial w}\right\}$ is the same too, except for a term that must be introduced in the last equation that may be written as

$$\mathbf{B^T\Gamma}\left\{\frac{\partial \Delta\mathcal{L}}{\partial w}\right\} = \left\{\begin{array}{c} \mathbf{0}_{5\times 1} \\ -mVv_z\sin(\phi) \end{array}\right\} . \tag{31.178}$$

By adding the relevant terms, the following equations may be obtained:

First equation: Longitudinal translation

$$m_{at}\dot{V} + m\ddot{\theta}h + J_s\ddot{\psi}\sin(\phi) = Q_x \ . \tag{31.179}$$

Second equation: Lateral translation

$$m\dot{v}_y + m_{at}V\dot{\psi} - m\dot{v}_z \sin(\phi) + mv_z\dot{\phi}\cos(\phi) - mh\ddot{\phi}\cos(\phi) = Q_y \ . \tag{31.180}$$

Third equation: Translation in the z direction

$$m\dot{v}_z - m\dot{v}_y \sin(\phi) + mg\cos(\phi) + \frac{\partial \mathcal{F}_2\left(\dot{z},\dot{\theta}\right)}{\partial \dot{z}} + \frac{\partial \mathcal{U}_{s2}(z,\theta)}{\partial z} = Q_z \ . \tag{31.181}$$

Fourth equation: Roll rotation

$$\begin{gathered} J_x^*\ddot{\phi} - J_{xz}\cos(\phi)\ddot{\psi} - m\dot{v}_y h\cos(\phi) - J_s V\dot{\psi}\cos(\phi) + \\ -mgh\sin(\phi) - mgz\sin(\phi) + \frac{\partial \mathcal{U}_s(\phi)}{\partial \phi} + \frac{\partial \mathcal{F}\left(\phi,\dot{\phi}\right)}{\partial \dot{\phi}} = Q_\phi \ . \end{gathered} \tag{31.182}$$

Fifth equation: Pitch rotation

$$\begin{gathered} J_y^*\ddot{\theta} + J_y\sin(\phi)\ddot{\psi} + m\dot{V}(h+z) - mgh\cos(\phi)\theta + \\ + \frac{\partial \mathcal{F}_2\left(\dot{z},\dot{\theta}\right)}{\partial \dot{\theta}} + \frac{\partial \mathcal{U}_{s2}(z,\theta)}{\partial \theta} = Q_\theta \ . \end{gathered} \tag{31.183}$$

Sixth equation: Yaw rotation

$$\begin{gathered} \left[J_y^*\sin^2(\phi) + J_z\cos^2(\phi)\right]\ddot{\psi} - J_{xz}\cos(\phi)\ddot{\phi} + J_y\sin(\phi)\ddot{\theta} + m\dot{V}z\sin(\phi) + \\ + J_s\dot{V}\sin(\phi) + V\cos(\phi)\dot{\phi}\sum_{\forall i}\frac{J_{pi}}{R_{e_i}} - Vv_y\sum_{\forall i}\frac{J_{pi}}{R_{ei}^2} = Q_\psi \ . \end{gathered} \tag{31.184}$$

31.4.3 Final form of the equations of motion

The sideslip angles of the wheels and the generalized forces due to tires are identical to those seen in the previous model.

The aerodynamic forces and moments are referred to the xyz frame: Because the two added degrees of freedom cause a virtual displacement of the center of mass in the z direction equal to δz, a virtual rotation $\delta\theta$ about the y axis and an additional displacement proportional to $\delta\theta$ in the x direction, the virtual work of aerodynamic forces and moments is

$$\delta L_a = F_{xa}\delta x^* + [F_{ya}\cos(\phi) - F_{za}\sin(\phi)]\,\delta y^* + F_{za}\delta z + (F_{xa}h + M_{ya})\,\delta\theta^* +$$
$$+ (M'_{xa} - F_{ya}h)\,\delta\phi + [(F_{xa}h + M_{ya})\sin(\phi) + M_{za}\cos(\phi)]\,\delta\psi\ . \tag{31.185}$$

In the following equations the generalized aerodynamic forces included in Q_z and Q_θ will be assumed to be constant.

First equation: Longitudinal translation

$$m_{at}\dot{V} + +m\ddot{\theta}h + J_s\ddot{\psi}\sin(\phi) = F_{x1} + F_{x2} - \frac{1}{2}\rho V^2 S C_x\ . \tag{31.186}$$

Second equation: Lateral translation

$$m\dot{v}_y + m_{at}V\dot{\psi} - m\dot{v}_z\sin(\phi) + mv_z\dot{\phi}\cos(\phi) - mh\ddot{\phi}\cos(\phi) =$$
$$= [Y_v + \cos(\phi)\,Y_{v1}]\,v_y + Y_{\dot{\psi}}\dot{\psi} + Y_\phi\phi + \cos(\phi)\,Y_\delta\delta - \tfrac{1}{2}\rho V^2 S C_z\sin(\phi) + F_{y_e}\ , \tag{31.187}$$

where

$$\begin{cases} Y_v = -\frac{1}{V}\sum_{\forall k} C_k\ , \\ Y_{v1} = \frac{1}{2}\rho V_a S (C_y)_{,\beta}\ , \\ Y_{\dot{\psi}} = -\frac{1}{V}\sum_{\forall k} x_{Pk} C_k\ , \\ Y_\phi = \sum_{\forall k} C_{\gamma k}\ , \\ Y_\delta = \sum_{\forall k} K'_k C_k\ . \end{cases} \tag{31.188}$$

Third equation: Translation in the z direction

$$m\dot{v}_z - m\dot{v}_y\sin(\phi) + mg\cos(\phi) + \frac{\partial\mathcal{F}_2\left(\dot{z},\dot{\theta}\right)}{\partial\dot{z}} + \frac{\partial\mathcal{U}_{s2}(z,\theta)}{\partial z} = \frac{1}{2}\rho V^2 S C_z\ . \tag{31.189}$$

Fourth equation: Roll rotation

$$J_x^*\ddot{\phi} - J_{xz}\cos(\phi)\,\ddot{\psi} - m\dot{v}_y h\cos(\phi) - J_s V\dot{\psi}\cos(\phi) +$$
$$-mgh\sin(\phi) - mgz\sin(\phi) + \frac{\partial\mathcal{U}_s(\phi)}{\partial\phi} + \frac{\partial\mathcal{F}\left(\phi,\dot{\phi}\right)}{\partial\dot{\phi}} = L_v v_y\ , \tag{31.190}$$

where

$$L_v = \frac{1}{2}\rho V S\left[-h(C_y)_{,\beta} + t(C_{M_x})_{,\beta}\right]\ . \tag{31.191}$$

Fifth equation: Pitch rotation

$$
\begin{aligned}
&J_y^*\ddot{\theta} + J_y \sin(\phi)\,\ddot{\psi} + m\dot{V}\,(h+z) - mgh\cos(\phi)\,\theta + \\
&+\frac{\partial \mathcal{F}_2\left(\dot{z},\dot{\theta}\right)}{\partial \dot{\theta}} + \frac{\partial \mathcal{U}_{s2}(z,\theta)}{\partial \theta} = \frac{1}{2}\rho V^2 S\,(hC_z + lC_{My})\ .
\end{aligned}
\tag{31.192}
$$

Sixth equation: Yaw rotation

$$
\begin{aligned}
&\left[J_y^*\sin^2(\phi) + J_z\cos^2(\phi)\right]\ddot{\psi} - J_{xz}\cos(\phi)\,\ddot{\phi} + J_y\sin(\phi)\,\ddot{\theta} + \\
&+m\dot{V}z\sin(\phi) + J_s\dot{V}\,\sin(\phi) + V\cos(\phi)\,\dot{\phi}\sum_{\forall i}\frac{J_{pi}}{R_{e_i}} = \\
&= \left[N_v + \cos(\phi)\,Y_{v1}\right]v_y + N_{\dot{\psi}}\dot{\psi} + N_\phi\phi + \cos(\phi)\,N_\delta\delta + \\
&+\tfrac{1}{2}\rho V^2 S(-hC_x + lC_{M_y})\sin(\phi) + M_{ze}\ ,
\end{aligned}
\tag{31.193}
$$

where

$$
\begin{cases}
N_v = \frac{1}{V}\sum_{\forall k}\left[-x_{Pk}C_k + (M_{zk})_{,\alpha} + 2J_{pr}\left(\frac{V}{R_e}\right)^2\right]\ , \\
N_{v1} = \frac{1}{2}\rho V_a S l (C'_{M_z})_{,\beta}\ , \\
N_{\dot{\psi}} = \frac{1}{V}\sum_{\forall k}\left[-x_{Pk}^2 C_k + x_{r_k}(M_{z_k})_{,\alpha}\right]\ , \\
N_\phi = \sum_{\forall k} x_{rk}C_{\gamma k}\ , \\
N_\delta = \sum_{\forall k}\left[x_{Pk}K'_k C_k - (M_{zk})_{,\alpha}\right]\ .
\end{cases}
\tag{31.194}
$$

31.4.4 Motion about the steady-state equilibrium configuration

Proceeding as in the previous model, a value for the roll angle in steady-state conditions that coincides with that already computed is obtained. If the expressions so obtained are directly compared, they appear different, because in the present case there is a term

$$mgz\sin(\phi)$$

that was not present in the earlier model. However, this term has the same order of magnitude of the term

$$mzV\dot{\psi}\cos(\phi)\,,$$

which was neglected, because it contained the product of two small quantities (z and $\dot{\psi}$) (actually, if the roll angle is less than 45° this product is even smaller). The problem lies in the fact that once angle ϕ is no longer considered as a small quantity, to consider other variables as such is no longer correct, leading to problems that cannot be solved within the frame of models of this kind. The only solution is to neglect the term $mgz\sin(\phi)$ as well.

Assuming that the coordinates are expressed as the sum of a steady state contribution (subscript 0) plus a contribution that varies in time (subscript 1), the equations of motion may be written as

$$m_{at}\dot{V} + +m\ddot{\theta}_1 h + J_s\ddot{\psi}_1 \sin(\phi_0) = F_{x1} + F_{x2} - \frac{1}{2}\rho V^2 S C_x \ , \tag{31.195}$$

$$\begin{gathered} m\dot{v}_{y1} + m_{at}V\dot{\psi}_1 + m_{at}V\dot{\psi}_0 - m\dot{v}_{z1}\sin(\phi_0) - mh\ddot{\phi}_1\cos(\phi_0) = \\ = [Y_v + \cos(\phi_0)\, Y_{v1}]\,(v_{y0} + v_{y1}) + Y_{\dot{\psi}}\left(\dot{\psi}_0 + \dot{\psi}_1\right) + Y_\phi\,(\phi_0 + \phi_1) + \\ + \cos(\phi_0)\, Y_\delta\,(\delta_0 + \delta_1) - \tfrac{1}{2}\rho V^2 S C_z \sin(\phi_0) - \tfrac{1}{2}\rho V^2 S C_z \phi_1 \cos(\phi_0) + F_{y_e} \ , \end{gathered} \tag{31.196}$$

$$\begin{gathered} m\dot{v}_{z1} - m\dot{v}_{y1}\sin(\phi_0) + mg\cos(\phi_0) - mg\phi_1\sin(\phi_0) + \frac{\partial \mathcal{F}_2\left(\dot{z}_1, \dot{\theta}_1\right)}{\partial \dot{z}} + \\ + \frac{\partial \mathcal{U}_{s2}\,(z_0 + z_1, \theta_0 + \theta_1)}{\partial z} = \frac{1}{2}\rho V^2 S C_z \ , \end{gathered} \tag{31.197}$$

$$\begin{gathered} J_x^*\ddot{\phi}_1 - J_{xz}\cos(\phi_0)\,\ddot{\psi}_1 - m\dot{v}_{y1}h\cos(\phi_0) - J_s V\dot{\psi}_1\cos(\phi_0) + \\ -J_s V\dot{\psi}_0\cos(\phi_0) - mgh\sin(\phi_0) - mgh\phi_1\cos(\phi_0) - mgz_1\sin(\phi_0) + \\ + \frac{\partial \mathcal{U}_s(\phi)}{\partial \phi} + \frac{\partial \mathcal{F}\left(\phi, \dot{\phi}\right)}{\partial \dot{\phi}} = L_v\,(v_{y0} + v_{y1}) \ , \end{gathered} \tag{31.198}$$

$$\begin{gathered} J_y^*\ddot{\theta}_1 + J_y\sin(\phi_0)\,\ddot{\psi}_1 + m\dot{V}\,(h + z_0 + z_1) - mgh\cos(\phi_0)\,(\theta_0 + \theta_1) + \\ + \frac{\partial \mathcal{F}_2\left(\dot{z}, \dot{\theta}\right)}{\partial \dot{\theta}} + \frac{\partial \mathcal{U}_{s2}\,(z_0 + z_1, \theta_0 + \theta_1)}{\partial \theta} = \frac{1}{2}\rho V^2 S\,(hC_z + lC_{My}) \ , \end{gathered} \tag{31.199}$$

$$\left[J_y^* \sin^2(\phi_0) + J_z \cos^2(\phi_0)\right] \ddot{\psi}_1 - J_{xz} \cos(\phi_0) \ddot{\phi}_1 + J_y \sin(\phi_0) \ddot{\theta}_1 +$$

$$+ m\dot{V}(z_0 + z_1) \sin(\phi_0) + J_s \dot{V} \sin(\phi_0) + J_s \dot{V} \phi_1 \cos(\phi_0) + V \cos(\phi_0) \dot{\phi}_1 \sum_{\forall i} \frac{J_{pi}}{R_{e_i}} =$$

$$= [N_v + \cos(\phi) Y_{v1}](v_{y0} + v_{y1}) + N_{\dot{\psi}} \left(\dot{\psi}_0 + \dot{\psi}_1\right) + N_\phi (\phi_0 + \phi_1) +$$

$$+ \cos(\phi_0) N_\delta (\delta_0 + \delta_1) + \tfrac{1}{2}\rho V^2 S(-hC_x + lC_{M_y}) \sin(\phi_0) +$$

$$+ \tfrac{1}{2}\rho V^2 S(-hC_x + lC_{M_y}) \phi_1 \sin(\phi_0) + M_{ze} \quad . \tag{31.200}$$

Steady-state conditions

$$F_{x1} + F_{x2} - \frac{1}{2}\rho V^2 S C_x = 0 \ , \tag{31.201}$$

$$\begin{aligned} m_{at} V \dot{\psi}_0 = [Y_v + \cos(\phi) Y_{v1}] v_{y0} + Y_{\dot{\psi}} \dot{\psi}_0 + Y_\phi \phi_0 + \\ + \cos(\phi_0) Y_\delta \delta - \tfrac{1}{2}\rho V^2 S C_z \sin(\phi_0) + F_{y_e} \ , \end{aligned} \tag{31.202}$$

$$mg \cos(\phi_0) + \frac{\partial \mathcal{U}_{s2}(z, \theta)}{\partial z} = \frac{1}{2}\rho V^2 S C_z \ , \tag{31.203}$$

$$-J_s V \dot{\psi} \cos(\phi_0) - mgh \sin(\phi_0) = L_v v_{y0} \ , \tag{31.204}$$

$$-mgh \cos(\phi_0) \theta_0 + \frac{\partial \mathcal{U}_{s2}(z, \theta)}{\partial \theta} = \frac{1}{2}\rho V^2 S (hC_z + lC_{My}) \ , \tag{31.205}$$

$$\begin{aligned} [N_v + \cos(\phi) Y_{v1}] v_{y0} + N_{\dot{\psi}} \dot{\psi}_0 + N_\phi \phi_0 + \cos(\phi_0) N_\delta \delta + \\ + \tfrac{1}{2}\rho V^2 S(-hC_x + lC_{M_y}) \sin(\phi_0) + M_{ze} = 0 \ . \end{aligned} \tag{31.206}$$

The first, second, fourth and sixth equations coincide with those previously seen, and may be used to compute first the driving forces needed to travel at speed V, then the roll angle ϕ_0 and v_{y0} (or, better, the sideslip angle β) and the yaw velocity $\dot{\psi}_0$ (or better the radius of the path).

Finally, the third and fifth equations allow z_0 and θ_0 to be computed.

Remark 31.4 *The steady-state condition is not influenced by the presence of suspensions, even if the uncoupling between handling and comfort cannot be managed because the roll angle is not small.*

Motion about the steady-state condition

The equation of motion in the state space is

$$\mathbf{A}_2 \dot{\mathbf{z}} = \mathbf{A}_1 \mathbf{z} \ , \tag{31.207}$$

where:

$$\mathbf{z} = \begin{bmatrix} V & v_y & v_z & v_\phi & v_\theta & v_\psi & z & \phi & \theta \end{bmatrix}^T ,$$

$$v_z = \dot{z} \ , \ v_\phi = \dot{\phi} \ , \ v_\theta = \dot{\theta} \ , \ v_\psi = \dot{\psi}$$

and

$$\mathbf{A}_2 = \begin{bmatrix} \begin{bmatrix} m_{at} & 0 & 0 & 0 & mh & J_s s \\ 0 & m & -ms & -mhc & 0 & 0 \\ 0 & -ms & m & 0 & 0 & 0 \\ 0 & -mhc & & J_x^* & 0 & -J_{xz}c \\ m\,(h+z_0) & 0 & 0 & 0 & J_y^* & J_y s \\ J_s s & 0 & 0 & -J_{xz}c & J_y s & J_y^* s^2 + J_z c^2 \end{bmatrix} & \mathbf{0}_{6\times 3} \\ \mathbf{I}_{3\times 6} & \mathbf{I}_{3\times 3} \end{bmatrix} ,$$

$$\mathbf{A}_1 = \begin{bmatrix} 0 & 0 & 0 & 0 & 0 & 0 & 0 & 0 & 0 \\ 0 & Y_v^* & 0 & 0 & 0 & m' & 0 & Y_\phi + Y_{\phi 1}c & 0 \\ 0 & 0 & -c_{11} & 0 & -c_{12} & 0 & -k_{11} & -mg\phi_1 s & -k_{12} \\ 0 & L_v & 0 & -c_\phi & 0 & J_s V c & +mgs & m'' & 0 \\ 0 & 0 & -c_{12} & 0 & -c_{22} & 0 & m\dot{V} - k_{12} & 0 & -k_{22}^* \\ 0 & N_v^* & 0 & N_{\dot{\phi}}^* & 0 & N_{\dot{\psi}} & m\dot{V}s & N_\phi^* & 0 \\ 0 & 0 & 1 & 0 & 0 & 0 & 0 & 0 & 0 \\ 0 & 0 & 0 & 1 & 0 & 0 & 0 & 0 & 0 \\ 0 & 0 & 0 & 0 & 1 & 0 & 0 & 0 & 0 \end{bmatrix} ,$$

$$c = \cos(\phi_0) \ , \ s = \sin(\phi_0) \ , \ Y_v^* = Y_v + Y_{v1}c \ , \ k_{22}^* = k_{22} - mghc \ ,$$

$$m' = -m_{at} + Y_{\dot{\psi}} \ , \ m'' = mghc - k_\phi \ ,$$

$$N_v^* = N_v + N_{v1}c \ , \ N_{\dot{\phi}}^* = -Vc \sum_{\forall i} \frac{J_{pi}}{R_{e_i}} \ , \ N_\phi^* = N_{\phi 1}c + N_\phi - J_s \dot{V} c \ .$$

Remark 31.5 *As could be predicted, handling and comfort are not uncoupled, but all coupling terms contain the sine of angle ϕ_0, and thus vanish when the roll angle is small.*

The coupled handling and comfort model can also be used for the study of the controlled system by adding the equations describing the behavior of the roll controller.